CORPORATE OVERVIEW

Dandong Dawang Steel Castings Co.,Ltd.

THE AGENDA FOR OVERVIEW

8 Sections On This Overview

1. INTRODUCTION
Basic Information And Time Line

2. COMPETENCIES
Four Core Company Values

3. OUR PRODUCTS
Sand Casting And Investment Casting

4. SERVICES AND EQUIPMENT
Process Flow And Management

5. CUSTOMERS MAP
Most Customers Are Fortune 500 Firms

6. CERTIFICATE
System, etc.

7. OUR TEAM
Leaders Team

8. CONTACT US
www.dawangcasting.com

INTRODUCTION

1998 - 2021

BASIC INFORMATION

Company's Overview.

HISTORY	PEOPLE	CERTIFICATE	CLIENTS	PRODUCTS	FACILITIES
Established in "1998" "20" years' casting production experiences	400+ workers 30 professional staffs	ISO9001 Quality Standard ISO14001 Environmental Standard IOS 45001 Environmental Standard IATF 16949 AD2000 Material Standard TUV Nuard issued by Germany	John Deere BUYER of America HIGHLAND KUBOT of German AZBIL of Japan KOMATSU of Japan …..	Automotive Railway Mining Machinery Agricultural Machinery parts Pump Valves Constructional Machinery Medical Machinery …..	Spectrograph Automatic Sand Casting Molding Line Multistation Wax Injection Machines CMM UT MT PT …..

Dawang

TIMELINE SAMPLE

1998 - 2021

1998

DAWANG WAS FOUNDED

Kaibao Wang took over the company from his father, with fixed assets less than **200,000 RMB**, and less than 20 workers.

2003-2005

EXPANDING

Dawang becoming the largest foundry in Dandong, with the sales of **32.7 million yuan**. The factory was expanded to **13,000 ㎡**, with an investment of **10 million RMB**. Silica sol and machining production lines were added.

2008-2010

UPGRADE

Nearly **40 million** investment, adding four automatic shellmaking lines, improving work efficiency by **5 times**, optimizing manufacturing process, dust removal device, semi-automatic pouring production line, nontoxic and pollution-free, reducing labor intensity and improving working environment.

2012

MERGING

Invested **23 million** yuan to buy out Dandong Best Machinery Co., Ltd., Established the sand casting workshop, mainly producing mining machinery parts, coal machine parts, railway locomotive parts and excavator parts.

TIMELINE SAMPLE

1998 - 2021

2017

UPGRADE

Invested **10 million yuan** to carry out a technical transformation and upgrade the sand casting workshop. Introduced a 20t/h automatic molding production line, and achieved an annual production capacity of 5000t. The Japanese Fuji Electric Furnace was introduced.

2018

INVESTMENT IN NEW FACTORY

To meet market needs, in 2018, Dawang will acquire **53000 ㎡** of land in the industrial park, investing **60 million yuan** to establish two new casting production lines: a precision casting production line, and a shell mold shell production line. By 2021, annual capacity can reach 5000t**.**

2018

UPGRADE CASTING FOUNDRY

A technical improvement plan for precision casting production line has been determined. It is planned to be implemented in 2018, with an investment of **20 million yuan**. After the production, the annual capacity can reach 5000t.

2021

UPGRADE MACHINING

The machining workshop of the casting plant was expanded and established the Dawang Equipment Manufacturing Co.,Ltd, which is under construction now.

FIRST FACTORY

Dawang Has 4 Factories.

Dawang Steel Investment Casting

Precision casting factory covers an area of about **40000㎡**. **300** employees.
The annual output is **5,500 tons.**
It is expected that a comprehensive transformation of the factory will be completed by 2021, mainly including equipment and process transformation.
New equipment and materials are selected to improve work efficiency, increase production capacity, and improve working environment.
The precision casting plant is expected to have a new annual output of **8,000 tons.**

SECOND FACTORY

Dawang Has 4 Factories.

Dawang Sand Casting

Sand steel casting factory covers an area of about **25000 ㎡**, with an annual output of **5000 tons**. **60 employees.**

In 2018, we will transform the sand casting factory through increasing the automatic molding line, changing the ceramsite technology, and introducing advanced Fuji electric furnace. These transformations will help Dawang save labor costs and energy consumption, protect the environment, and meet the national environmental protection requirements.

A second automatic molding line will be added in 2021 year. Then the sand casting factory is expected to produce **7,000 tons** per year and will continue to increase its capacity in the future.

THIRD FACTORY

Dawang Has 4 Factories.

Sanhe Steel Investment Casting

In 2018, The company is in the process of establishing a new precision casting factory, investing more than **60 million RMB**, acquiring a land of **55000㎡**. It is predicted to have **200 workers** with new equipment and process control. The new factory has started its production in 2021.

FOURTH FACTORY

Dawang Has 4 Factories.

Dawang Equipment Manufacturing

The original machining workshop of Dawang Steel Castings Co., Ltd is rebuilt in 2021. Dawang purchased 26,600 ㎡ of land to establish a new machining factory, which is under the construction.

COMPETENCIES

1.Product Development 2. Process Flow 3. Management & Certification
4. Export Experience

THE STRENGTH OF OUR COMPANY

Four Core Company Strength.

PRODUCT DEVELOPMENT

Dawang has **23** years of history and **200** new products developed every year. We constantly have more than 1000 products in production.

.

EXPORT EXPERIENCE

With **20** years of export experience, **90%** of the company's products are exported to Europe, America, Japan and other areas.

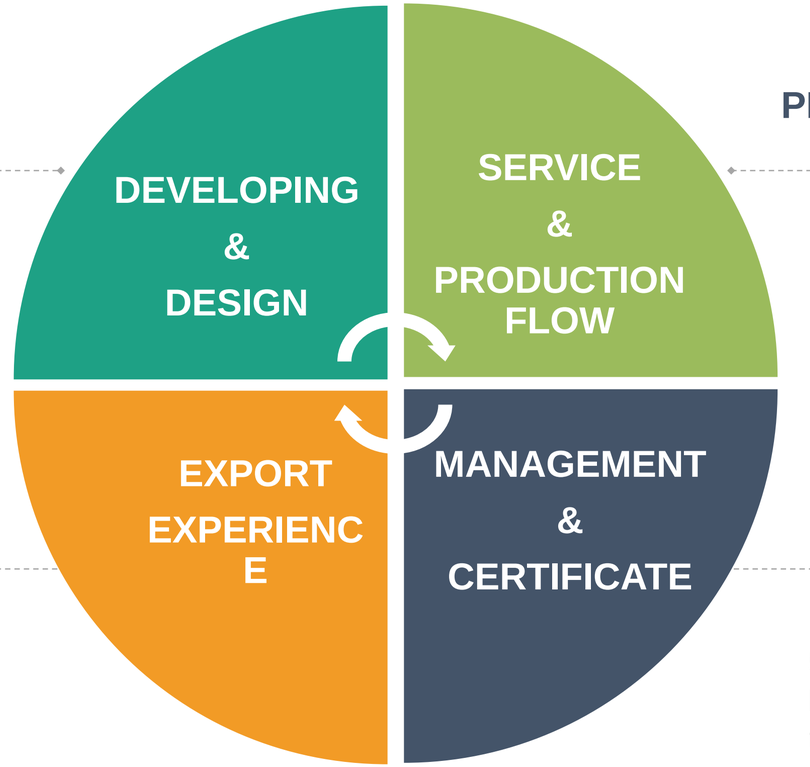

SERVICE & PRODUCTION FLOW

30 technical, quality and inspection talents. Throughout the process, we constantly improve our service and process, aiming for the best quality of our products.

MANAGEMENT & CERTIFICATE

IATF16949,ISO9001,ISO14001,GB/T45001 Management system certificate **Environmental:** full compliance with the environmental protection laws and regulations of China.

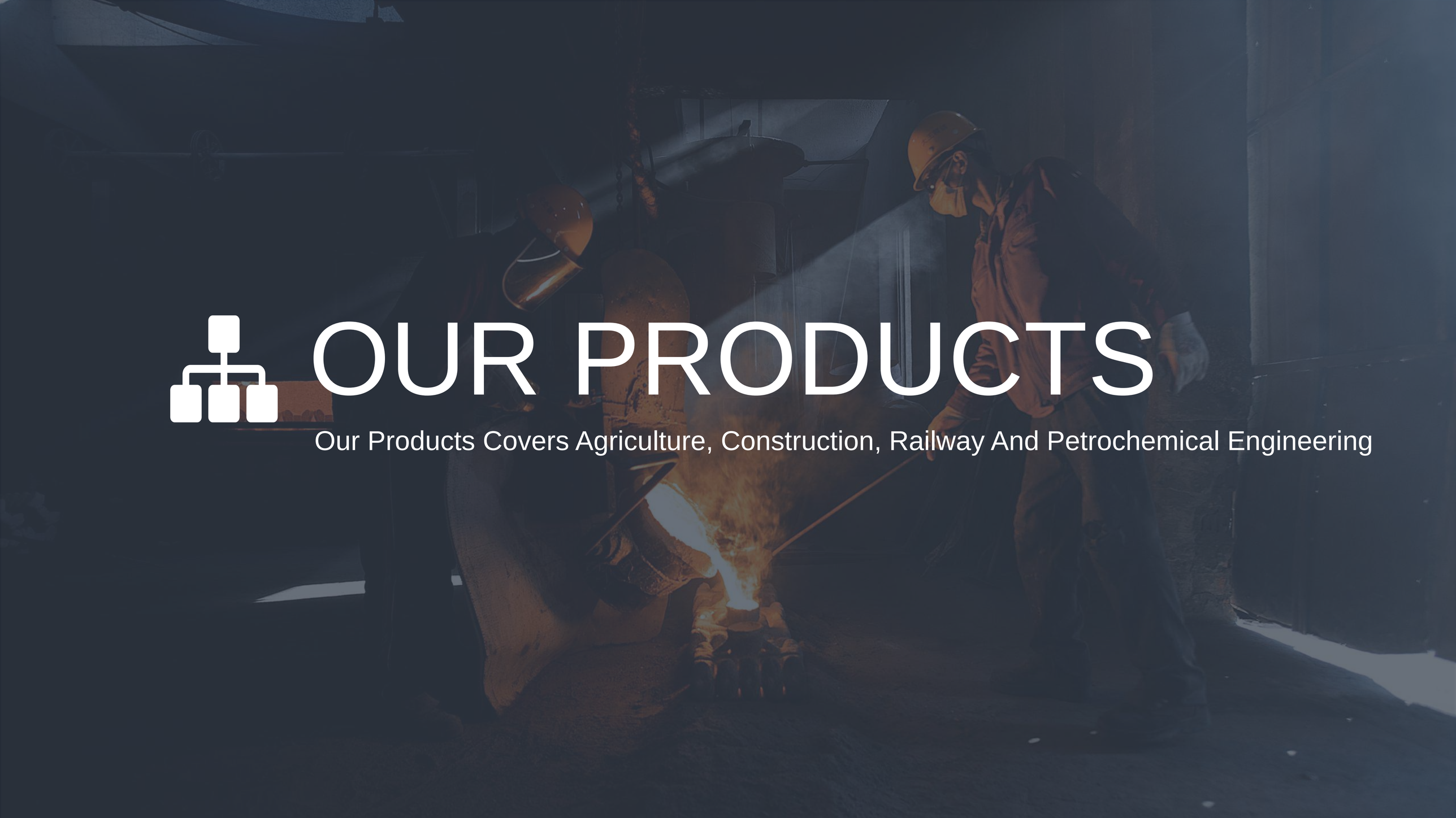

OUR PRODUCTS

Our Products Covers Agriculture, Construction, Railway And Petrochemical Engineering

PRODUCT CATEGORIES

Besides These Four Main Products' Categories, We Also Can Produce Basis On Customers' requirements.

Agricultural Machinery

There are over **380** different parts we already developed. The main customer is John Deere.

Construction Machinery

We have developed over **360** parts. The main customers are Hitachi, CAT and Liebherr.

Railway Vehicle

Dawang has developed over **270** products. The main customers are SOEs.

Petrochemical Engineering

Dawang has developed over **180** products. The main customers are Highland and LESER.

MAIN PRODUCTS PROPORTION

These Five Products Are Mainly Produced By Dawang Annually.

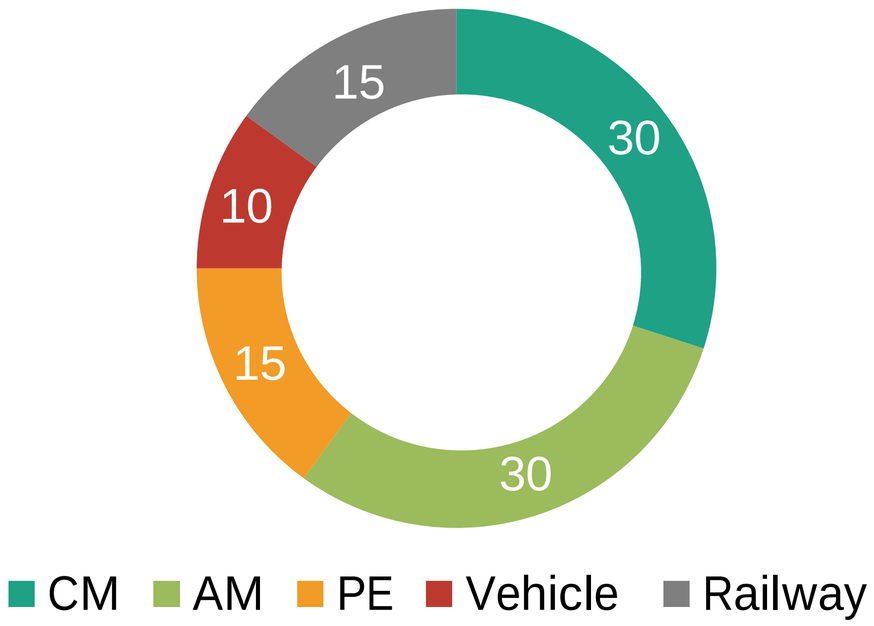

30% — 30% of products are for constructon machinery. Customers are Hitachi, Kubota, CAT, Liebherr and Komatsu.

30% — 30% of products are for agriculture machinery. Customers are John Deere and other Chinese brands.

15% — 15% of products are for petrechemical engineering. Customers are Highland Foundry

10% — 10% of products are for vehicle. Customers are Ameican Buyer and SG Automotive Group.

15% — 15% of products are for railway. Customers are Chinese SOEs.

SAND CASTING

7 Samples Of High Difficulty Products that Dawang Is Producing.

Type	Connecting structural parts				
Material	JDM B2J 4330V				
HT	Quenching and Tempering				
Weight	180Kg				
Mechanical Property					
Yield	Tensile	Elongation			
≥725MPa	≥858MPa	≥17%			
Reduction of Area	Hardness	Impact Energy			
≥35%	225-275HB	27J(-30℃）			
Dimension	Length	Width	Height	Thickness	**Inspection：Section、RT、PT、UT、Hardness、Impact、Tensile**
MM	660	410	480	19-60	

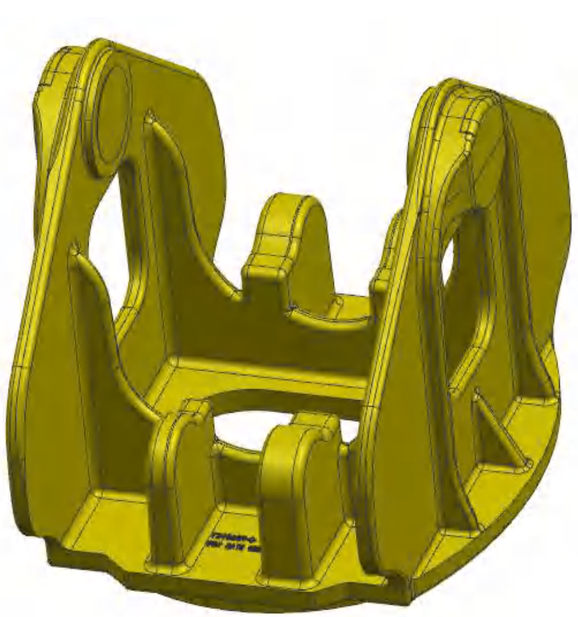

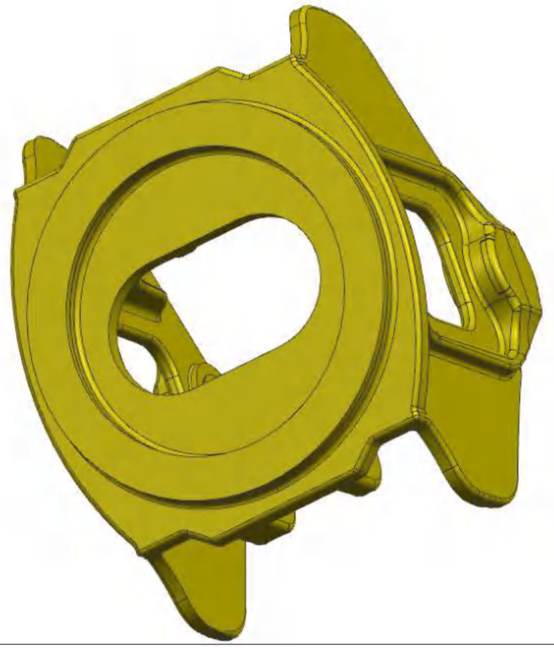

Difficulty

1. The symmetric vertical end of casting can be easily deformed during casting and heat treatment, resulting in unqualified products with defects, such as shrinkage and porosity. 2. The mechanical properties requirement of the product is high, and tempering process is needed. 3. The heat treatment must be uniform, and the casting body must be kept within the required hardness range. 4. Must ensure that the casting body, at the time of impact energy experiment (temperature - 30 ℃), standard shock impact energy block reaches more than 27 j.

SAND CASTING

7 Samples Of High Difficulty Products that Dawang Is Producing.

Type	Track Shoe				
Material	GS-22NiMoCr56				
HT	Quenching and Tempering				
Weight	180Kg				
Mechanical Property					
Yield	Tensile	Elongation			
≥800MPa	≥900MPa	≥10%			
Reduction of Area	Hardness	Impact Energy			
≥22%	280-310HB	27J(-40℃）			
Dimension	Length	Width	Height	Thickness	**Inspection：Section、RT、PT、UT、Hardness、Impact、Tensile**
MM	2000	440	220	10-30	

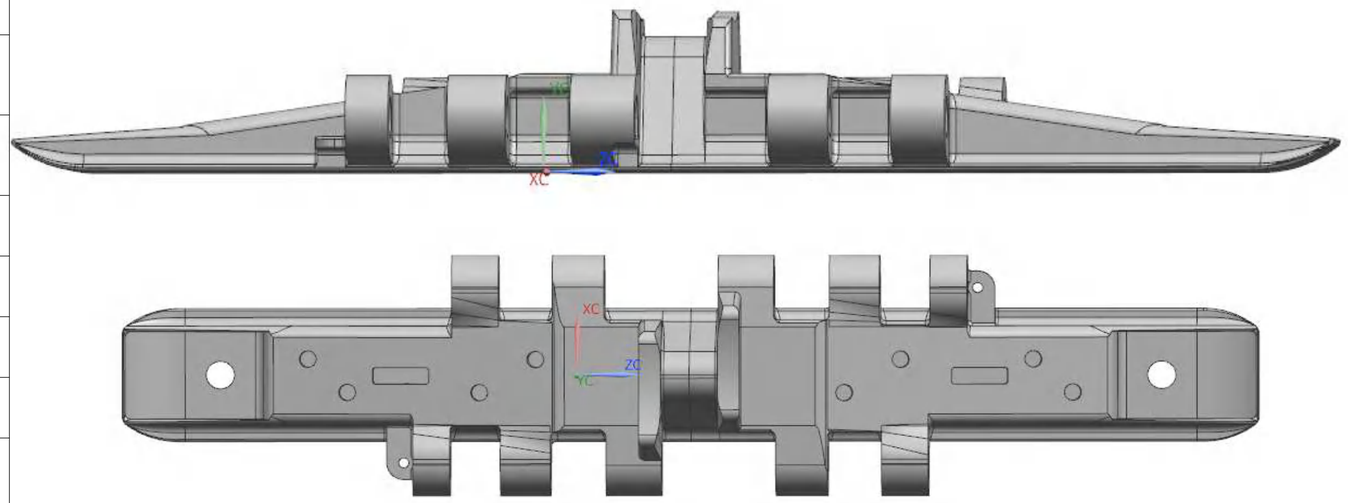

Difficulty

The casting body is long and thin. Due to high mechanical performance requirements, temperament is needed during heat treatment . As a result, problems like bending and cracks can easily arise. The thinnest part has a thickness of only 10mm, so insufficient pouring of steel can happen. There are five holes on both sides of the casting, and their centers should be kept in a straight line. Due to the use requirements, need to make sure that when at 40 ℃, the impact energy reaches 27 j (standard impact test block).

SAND CASTING

7 Samples Of High Difficulty Products that Dawang Is Producing.

Type	Bracket				
Material	IE0627				
HT	Normalizing+Tempering				
Weight	360Kg				
Mechanical Property					
Yield	Tensile	Elongation			
≥275MPa	≥485MPa	≥10%			
Reduction of Area	Hardness	Impact Energy			
≥16%	149-197				
Dimension	Length	Width	Height	Thickness	**Inspection：MT、UT、Hardness、Tensile**
MM	1200	730	210	15-40	

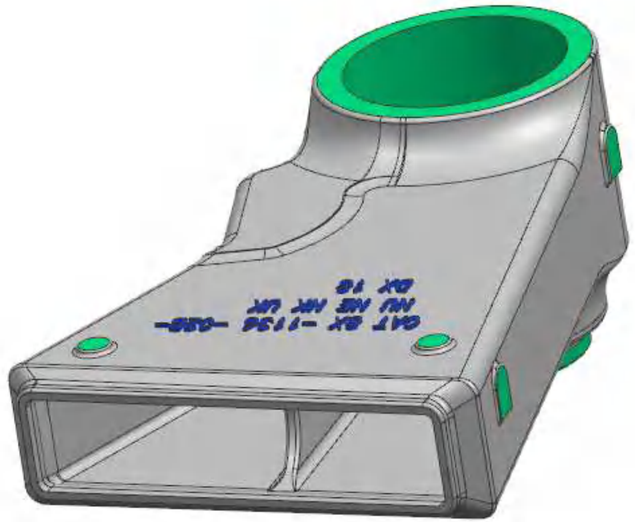

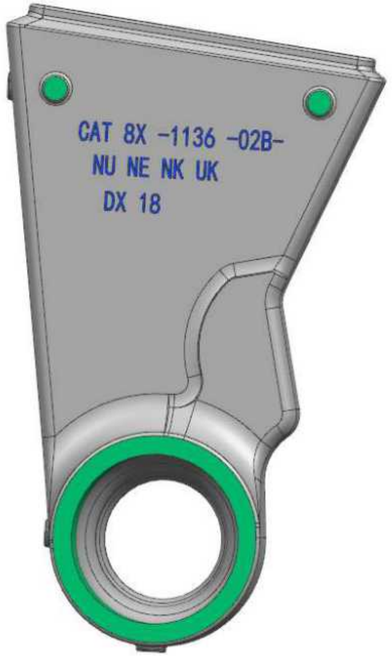

Difficulty

The casting size is large, so the surface area is large. During the casting process, a lack of wall thickness or even casting defects can easily happen. Its special structure also can lead to shrinkage and porosity in the joints between the plane and the facade.

SAND CASTING

7 Samples Of High Difficulty Products that Dawang Is Producing.

Type	Valve Body		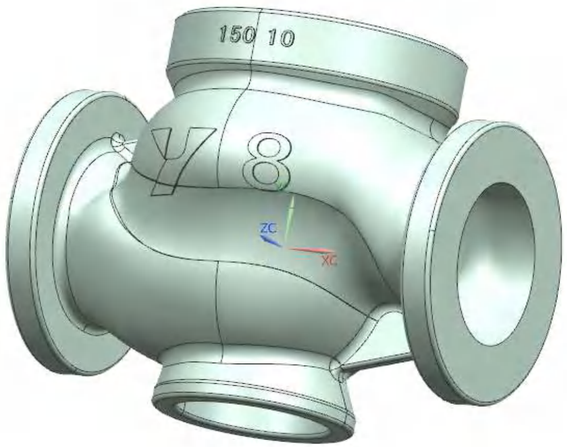		
Material	CF8/CF8M				
HT	Solution Treatment				
Weight	280Kg				
Mechanical Property					
Yield	Tensile	Elongation			
≥205MPa	≥480MPa	≥33%			
Hardness					
≤183HB					
Dimension	Length	Width	Height	Thickness	**Inspection：RT、PT、Hardness、Tensile**
MM	580	450	480	20-60	

Difficulty

The inner wall of valve body has a thickness of 20mm, which is very thin. Its shape is also irregular and large. Around the parts that connect to the valve port, due to the uneven thickness and rapid change, shrinkage and porosity and other internal defects can happen. Special tests need to be conducted. Because its material is CF8/CF8M, it is easy to generate cracks in the heat treatment process, which requires penetration test. In addition, when the material is cleaned later, it is difficult to polish due to its material characteristics, especially when the valve body cavity is treated. High quality requirements on surface include smooth internal and external walls; Because it is used in high pressure corrosion-prone environment, passivation treatment is needed.

SAND CASTING

7 Samples Of High Difficulty Products that Dawang Is Producing.

Type	Cantilever connecting rod				
Material	SCW480				
HT	Normalizing + Tempering				
Weight	50Kg				
Mechanical Property					
Yield	Tensile	Elongation			
≥275MPa	≥480MPa	≥20%			
Reduction of Area	Hardness	Impact Energy			
		27J(0℃)			
Dimension	Length	Width	Height	Thickness	**Inspection:**
MM	510	270	80	16-30	

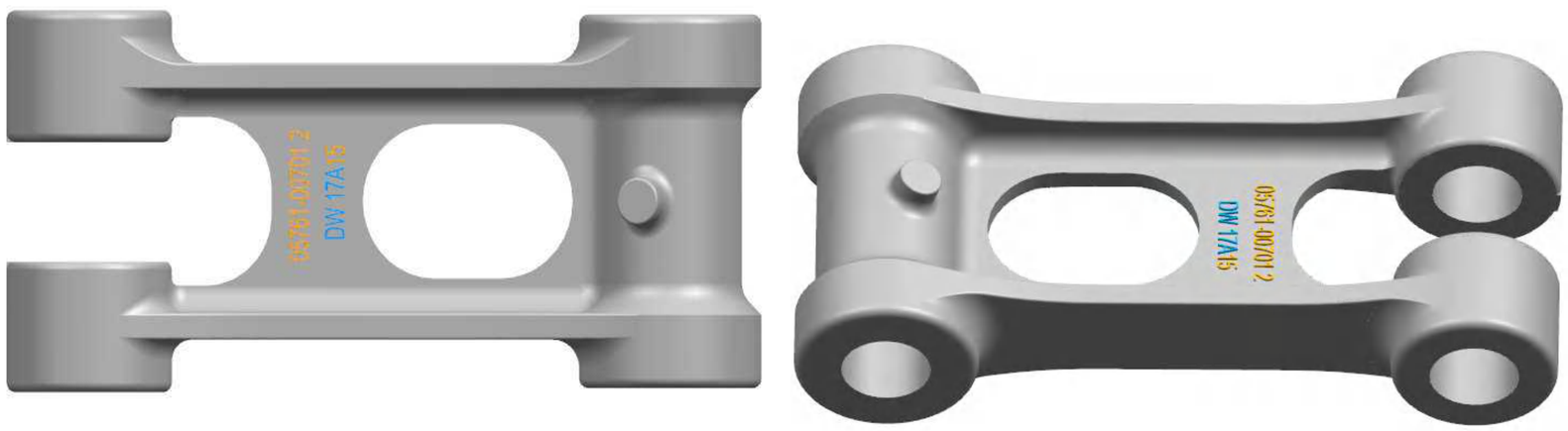

Difficulty

The casting is the part of the connecting rod of excavators. It is mandatory that that there is no defect inside the connecting rod, such as sand holes, pores and shrinkage cavity and porosity. The customer also has high planeness requirements for castings. The long arm shall not be warped.

SAND CASTING

7 Samples Of High Difficulty Products that Dawang Is Producing.

Type	Joint Structure	
Material	JDM B2J 4330V	
HT	Quenching and Tempering	
Weight	180Kg	
Mechanical Property		
Yield	Tensile	Elongation
≥725MPa	≥858MPa	≥17%
Reduction of Area	Hardness	Impact Energy
≥35%	325-375HB	27J(-30℃)

Dimension	Length	Width	Height	Thickness
MM	900	800	370	19-100

Inspection: Section、RT、PT、UT、Hardness、Impact、Tensile

Difficulty

The casting defects such as shrinkage and porosity are easily caused by the thickness change of the joint on each surface. Due to the high requirements of mechanical properties and the need for quality adjustment, the heat treatment stress can easily lead to cracks in the joints of surfaces. The heat treatment must be uniform, and the casting body must be kept within the required hardness range. Must ensure that the casting body block, at the time of impact energy experiment (temperature - 30 ℃), standard shock impact energy block reaches more than 27 j.

AGRICULTURAL MACHINERY

These Are Representative And Technically Difficult Products.

Type	Support Base	
Weight	17.5kg	
Material	JDM B2K1030	
HT	Normalizing	
Chemical Property		
C：0.25-0.35 Mn：0.70-1.00 P≤0.04 S≤0.045 Si：0.20-1.00Cu≤0.50 Ni≤0.50 Cr≤0.35 W≤0.10 Carbon: Ce≤0.45		
Mechanical Property		
Yield	Tensile	Elongation
≥448	≥350	≥25
Dimension		
Length	Width	Height
306mm	234mm	284mm
Difficulty		

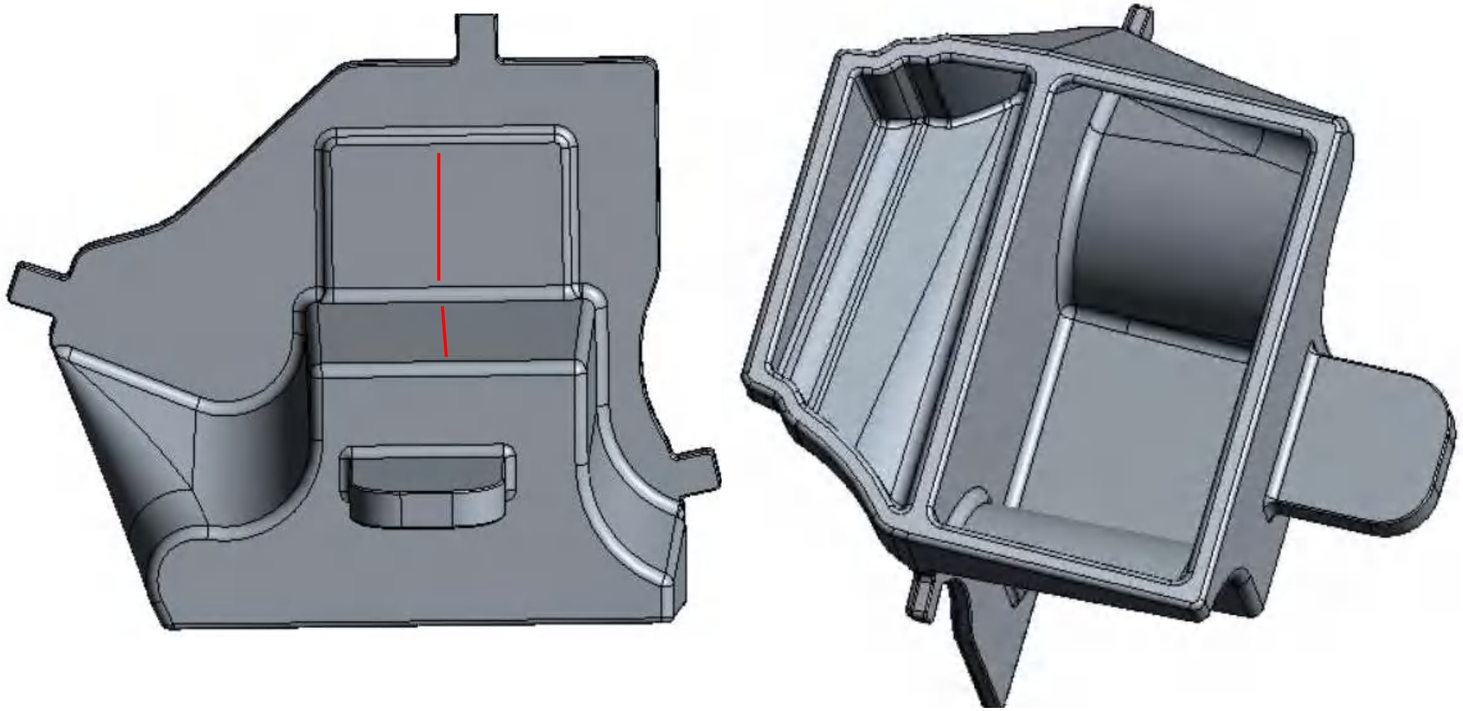

The product structure is complex, the wall thickness is not uniform, the three machine reinforcement points are easy to break in the production process, the red line two plane Angle in the figure is strict, and the large inner groove plane can swell easily.

AGRICULTURAL MACHINERY

These Are Representative And Technically Difficult Products.

Type	Front End
Weight	21kg
Material	JDM B2K1030
HT	Normalizing

Chemical Property

C：0.25-0.35 Mn：0.70-1.00 P≤0.04
S≤0.045 Si：0.20-1.00Cu≤0.50 Ni≤0.50
Cr≤0.35 W≤0.10 Carbon: Ce≤0.45

Mechanical Property

Yield	Tensile	Elongation
≥448	≥350	≥25

Dimension

Length	Width	Height
486mm	104mm	310mm

Difficulty

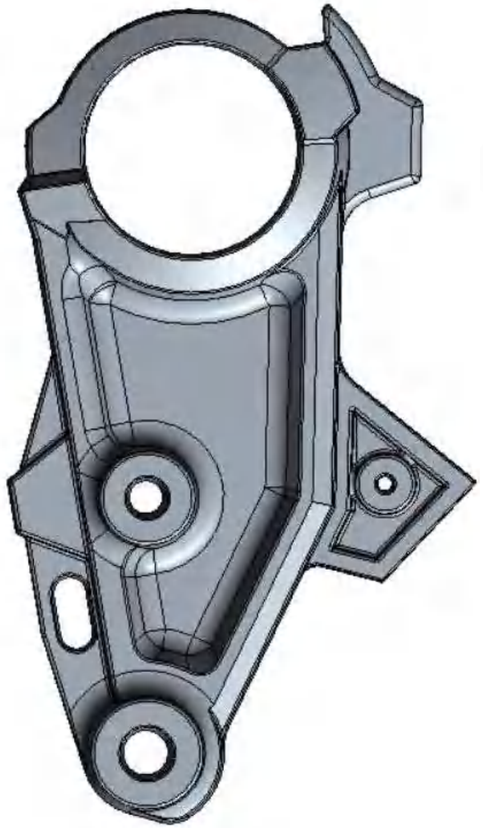

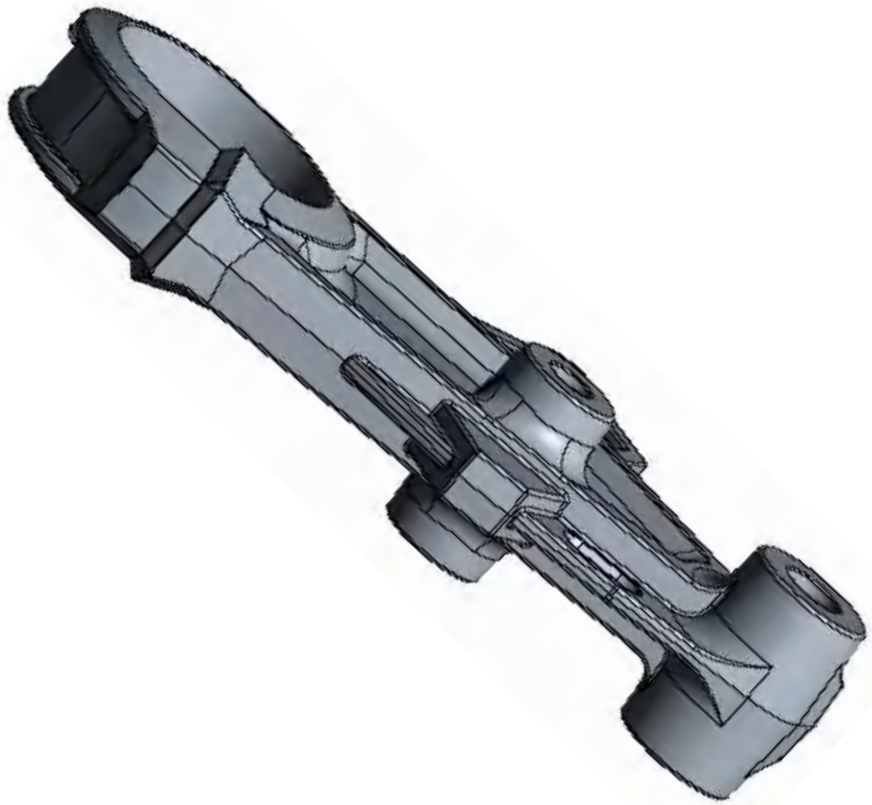

Product wall thickness is not uniform, deformation can be difficult to correct. Extra attention to defect prevention in hole processing.

AGRICULTURAL MACHINERY

These Are Representative And Technically Difficult Products.

Type	LH TOP CORNER	
Weight	5kg	
Material	JDM B2K8620	
HT	Annealing	
Chemical Property		
C:0.15-0.25;Si:0.2-0.8;Mn:0.65-0.95;P≤0.04;S≤0.045；Ni0.4-0.7;Cr:0.4-0.7;Mo:0.15-025, Carbon: CE≤0.47		
Mechanical Property		
Yield	Tensile	Elongation
≥550	≥340	≥22
Reduction Of Area	Impact (-30℃)	
≥35	≥27	
Dimension		
Length	Width	Height
240mm	140mm	83mm
Difficulty		

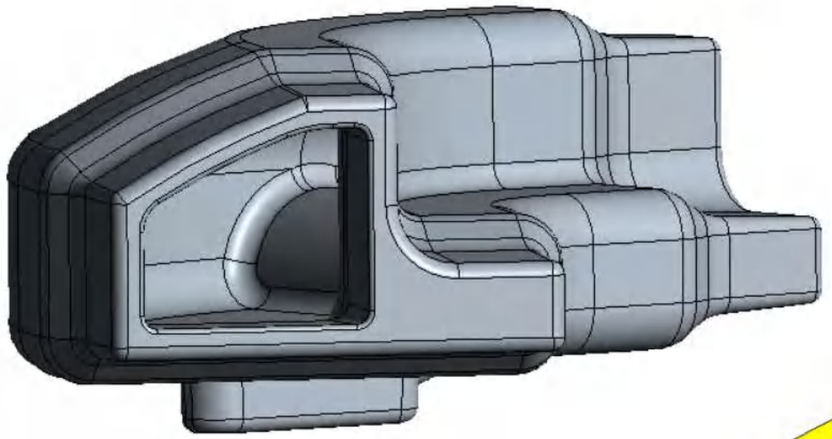

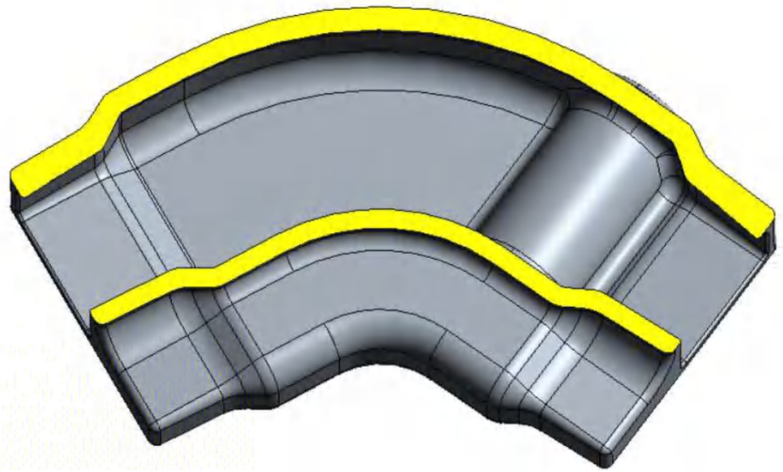

The wall thickness is not uniform. It is hard to dry the inner cavity when making the shell. Because it uses a silica sol process, the inner cavity is deep and curved, and it is difficult to remove sand after casting, which can easily lead to deformation.

CONSTRUCTION MACHINERY

These Are Representative And Technically Difficult Products.

Type	Support Hardware	
Weight	7kg	
Material	SC410	
HT	Normalizing	
Chemical Property		
C≤0.3 Si:0.3-0.6 Mn：0.3-0.6 P≤0.040 S≤0.040		
Mechanical Property		
Yield	Tensile	Elongation
≥410	≥205	≥21
Reduction Of Area		
≥35		
Dimension		
Length	Width	Height
257mm	257mm	160mm

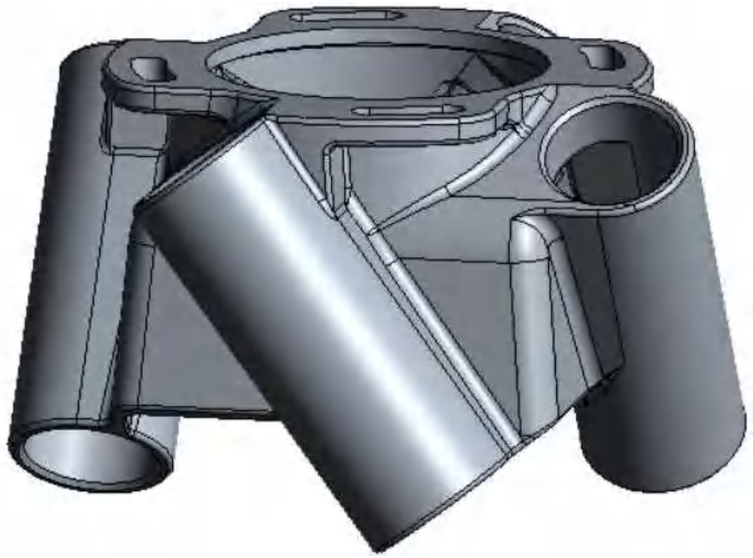

Difficulty

The product structure is complex and mold development process is hard, so we can only make the mold by hand. Also because there are many mold cores and it takes numerous steps to take out the mold, mold can be damaged easily. Uneven wall thickness or undercast can happen, This product needs hot dip zinc treatment.

CONSTRUCTION MACHINERY

These Are Representative And Technically Difficult Products.

Type	BRACKET	
Weight	24.3kg	
Material	SCW450	
HT	Normalizing	
Chemical Property		
C≤0.22;Si≤0.8;Mn≤1.5;P≤0.04; S≤0.04; Ce≤0.43		
Mechanical Property		
Yield	Tensile	Elongation
≥450	≥225	≥20
Hardness（HB）		
140-170		
Dimension		
Length	Width	Height
345mm	274mm	156mm
Difficulty		

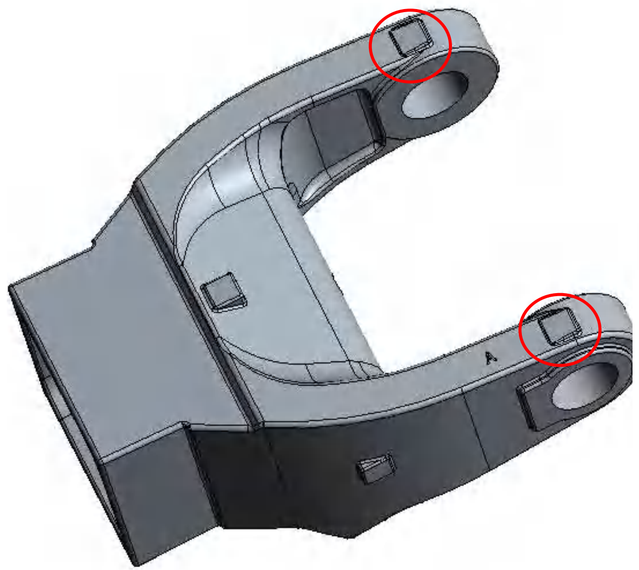

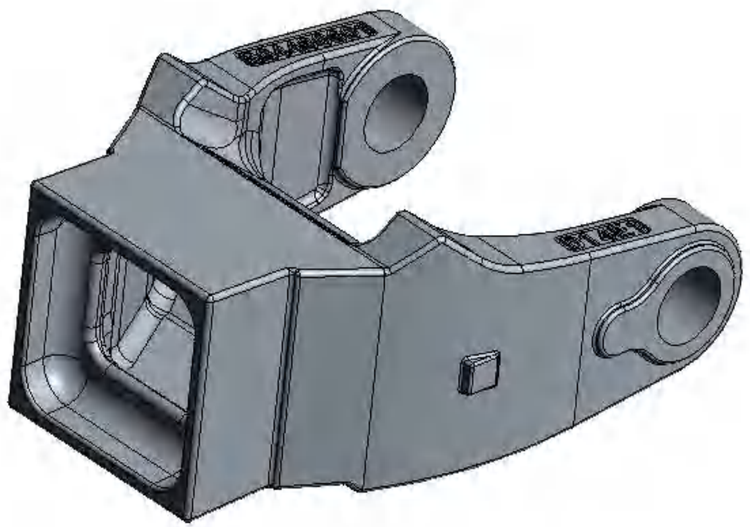

This product has uneven wall thickness and tedious casting system design. Process bars should be added in the middle to prevent deformation. The inner cavity is not easy to dry or be harden during shell making

CONSTRUCTION MACHINERY

These Are Representative And Technically Difficult Products.

Type	CASTING,FEMALE CLEVIS,.250	
Weight	12.2kg	
Material	A487 GRADE 4C	
HT	Normalizing	
Chemical Property		
C:≤0.3 Si≤0.8 Mn≤1.0 P≤0.045 S≤0.04 Cr：0.4-0.8 Ni：0.4-0.8 Mo:0.15-0.30		
Mechanical Property		
Yield	Tensile	Elongation
≥620	≥415	≥18
Impact	Hardness（HB）	
≥20	≤235	
Dimension		
Length	Width	Height
330mm	203mm	102mm
Difficulty		

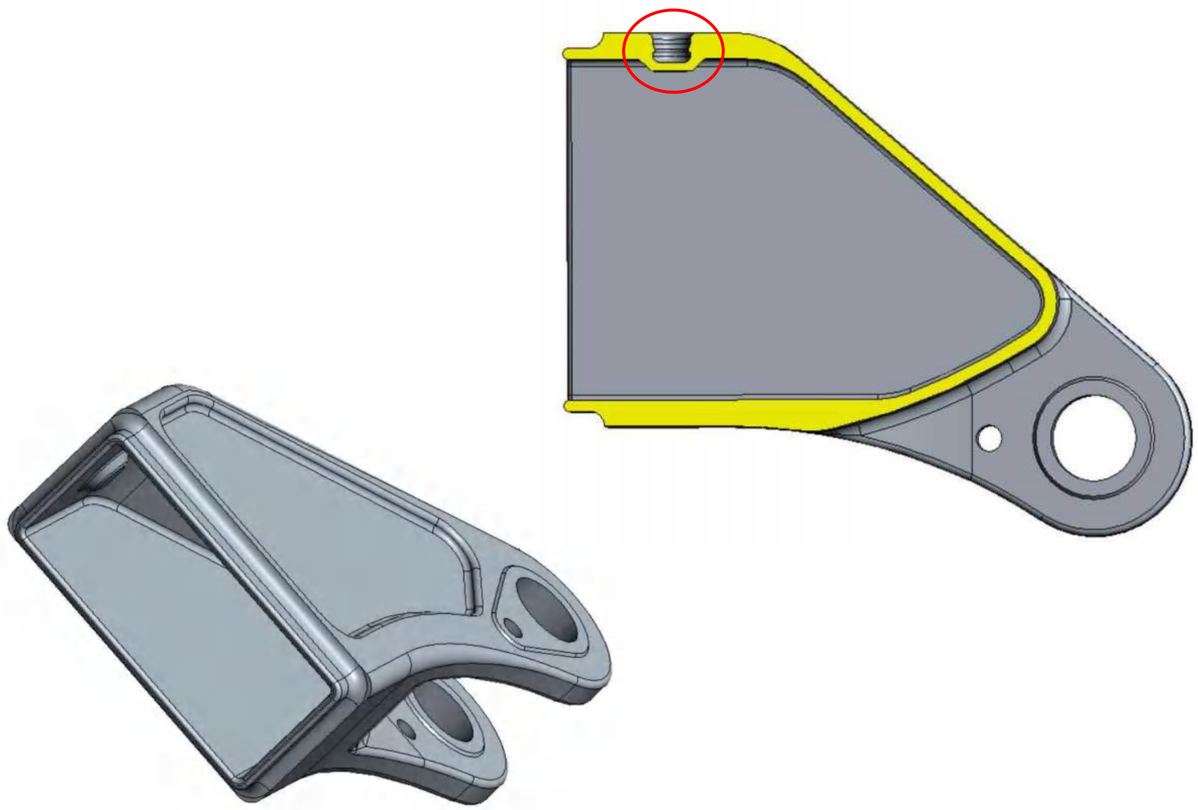

The thickness of the product is uneven, and it requires X-ray inspection. No defect shall exist inside, which leads to tedious casting system design and low production rate. The blind hole in red circle is prone to defect of iron beans.

CONSTRUCTION MACHINERY

These Are Representative And Technically Difficult Products.

Type	CASTING,FEMALE	
Weight	21.7kg	
Material	25CrMo	
HT	Quenching and Tempering	
Chemical Property		
C:0.22-0.3 Si:0.22-0.37 Mn:0.4-0.7 P≤0.035 S≤0.035 Cr:0.8-1.1 Ni≤0.03 Mo：0.15-0.3 Cu≤0.03		
Mechanical Property		
Yield	Tensile	Elongation
≥885	≥685	≥12
Hardness（HB）	Reduction Of Area	
255-325	≤50	
Dimension		
Length	Width	Height
520mm	274mm	258mm
Difficulty		

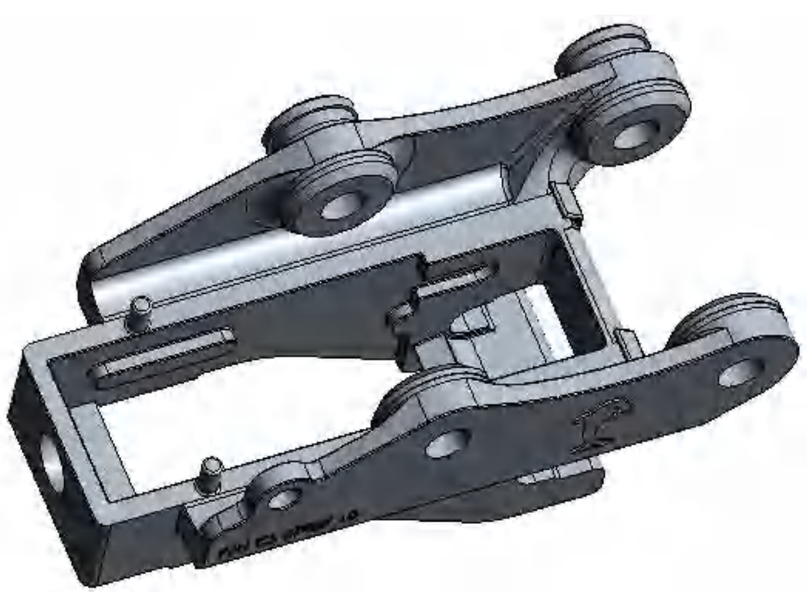

This product has complex structure, many hot joints, complicated casting system design, low yield, and complex die design structure. This casting needs to be tempered, and its hardness is easy to deform before hb255-325, and it is difficult to correct after treatment.

PETROCHEMICAL ENGINEERING

These Are Representative And Technically Difficult Products.

Type	Draining Valve	
Weight	3.31kg	
Material	WCB	
HT	Normalizing	
Chemical Property		
C≤0.3 Si≤0.6 Mn≤1 P≤0.04 S≤0.04 Cr≤ 0.25 Ni≤0.5 Mo≤0.25Cu≤0.5		
Mechanical Property		
Yield	Tensile	Elongation
485-655	≥250	≥22
Reduction Of Area		
≥35		
Dimension		
Length	Width	Height
160mm	115mm	120mm

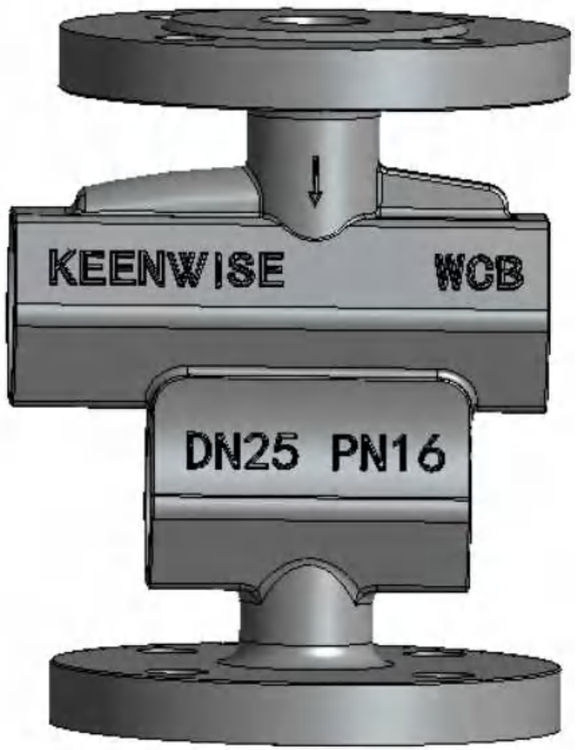

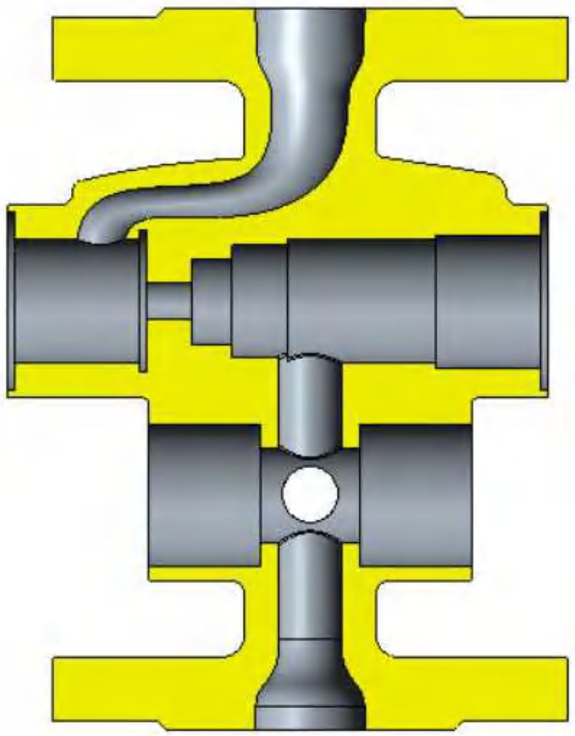

Difficulty

The thickness of valve body is not uniform, so it is easy to contract and loosen. The process design is complex, the production rate is low, the internal cavity hole groove is complex, not easy to clear sand, the inner cavity is easy to leak steel and the generation of pore sand hole, etc. The inner cavity needs to be fully hardened and air-dried during the shell making process.

PETROCHEMICAL ENGINEERING

These Are Representative And Technically Difficult Products.

Type	闭口式叶轮	
Weight	8.23kg	
Material	1.4460	
HT	Solution Treatment	
Chemical Property		
C≤0.05 Mn≤2 P≤0.035 S≤0.015 Si≤1 Cr：25-28 Ni：4.5-6.5 Mo:1.3-2 N:0.05-0.2		
Mechanical Property		
Yield	Tensile	Elongation
620-880	≥460	2≥0
Hardness（HB）		
≤260		
Dimension		
Length	Width	Height
226mm	226mm	81mm
Difficulty		

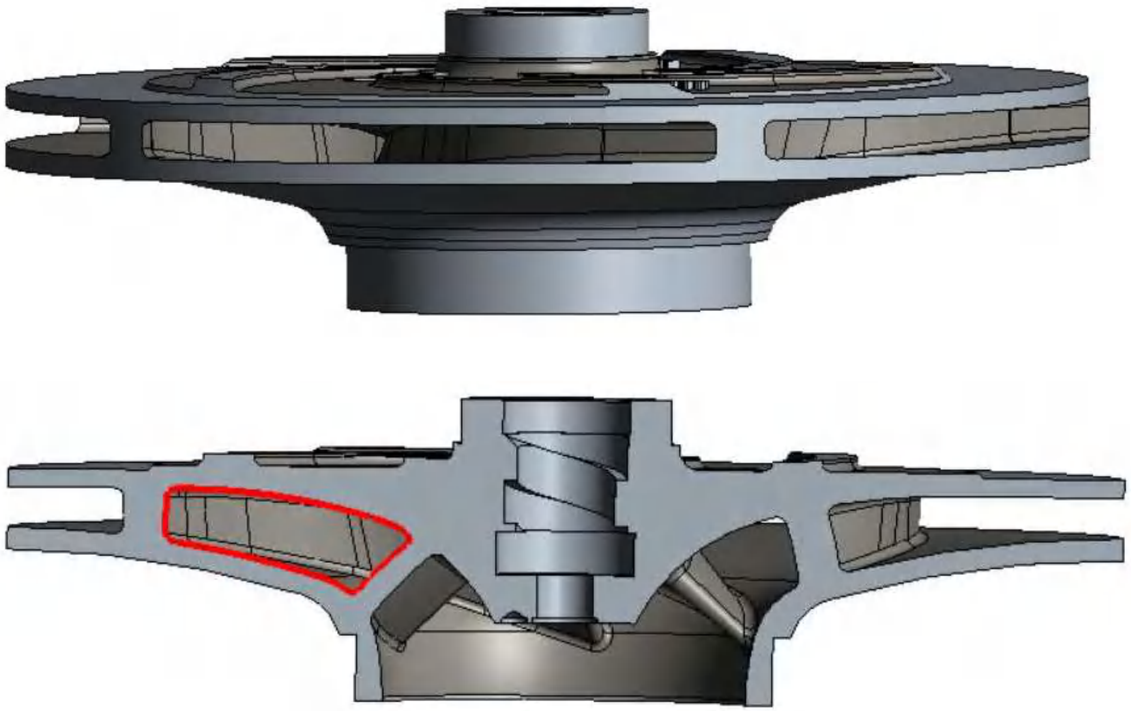

This impeller is a closed impeller with complex inner cavity shape, which is prone to leakage of steel and generation of pore sand holes. The wall thickness is not only thin, but also uneven. The wall thickness is 4mm.

PETROCHEMICAL ENGINEERING

These Are Representative And Technically Difficult Products.

Type	PUMP BODY	
Weight	28.8kg	
Material	1.4460	
HT	Solution Treatment	
Chemical Property		
C≤0.05 Mn≤2 P≤0.035 S≤0.015 Si≤1 Cr：25-28 Ni：4.5-6.5 Mo:1.3-2 N:0.05-0.2		
Mechanical Property		
Yield	Tensile	Elongation
620-880	≥460	≥20
Harness（HB）		
≤260		
Dimension		
Length	Width	Height
405mm	300mm	175mm

Difficulty

The product structure is complex and the pouring system is complicated. Because of the complex structure, the wax mold needs two parts of wax parts to be combined. It should be noted when melting ingredients, material is 1.4460, N elements are included in the chemical composition, and the amount of N elements should be noted. If N is added too much, gas will be generated during pouring, resulting in potential porosity defects on the surface of the casting.

PETROCHEMICAL ENGINEERING

These Are Representative And Technically Difficult Products.

Type	DN300 BV-BLLT	
Weight	12.1kg	
Material	CF8	
HT	Solution Treatment	
Chemical Property		
C≤0.08 Mn≤2 P≤0.04 S≤0.04 Si≤2 Cr：18-21 Ni：8-11		
Mechanical Property		
Yield	Tensile	Elongation
≥440	≥185	≥30
Hardness（HB）		
≤183		
Dimension		
Length	Width	Height
304mm	304mm	50mm
Difficulty		

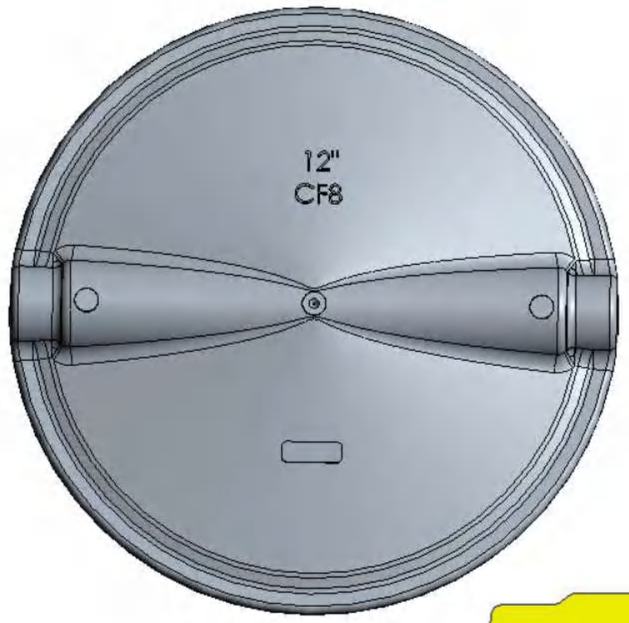

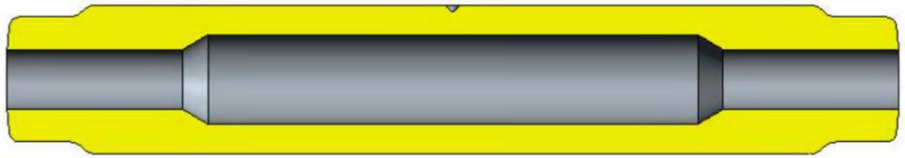

The middle hole of the product is too long, and it is easy to have the defects of steel leakage and bulge. Because the outer circle of the product to polish, smelting to control the time to remove slag and deoxygenation to be long. It is very difficult to calibrate the casting, which may cause deviation of the outer circle during machining.

RAILWAY AND VEHICLE

These Are Representative And Technically Difficult Products.

Type	Fender Support Base	
Weight	5.18kg	
Material	ZG270-500	
HT	Normalizing	
Chemical Property		
C≤0.4Si≤0.5Mn≤0.9P≤0.04 S≤0.04Ni≤0.3 Cr≤0.35 Mo≤0.2V≤0.05 Cu≤0.3		
Mechanical Property		
Yield	Tensile	Elongation
≥500	≥270	≥18
Reduction Of Area		
≥25		
Dimension		
Length	Width	Height
275mm	272mm	78mm
Difficulty		

This product has many hot spots and complex process design. All the holes should be made through casting process. The defects of iron beans, steel penetration and shrinkage are easy to occur in the holes.

RAILWAY AND VEHICLE

These Are Representative And Technically Difficult Products.

Type	Hanging Bracket
Weight	14kg
Material	ZG230-450
HT	Normalizing

Chemical Property

C≤0.3 Mn≤0.9 P≤0.04 S≤0.04 Si≤0.5Cu≤0.30
Ni≤0.30 Cr≤0.35 V≤0.05 Mo ≤0.2

Mechanical Property

Yield	Tensile	Elongation
≥450	≥230	≥22
Reduction Of Area		
≥32		

Dimension

Length	Width	Height
366mm	350mm	145mm

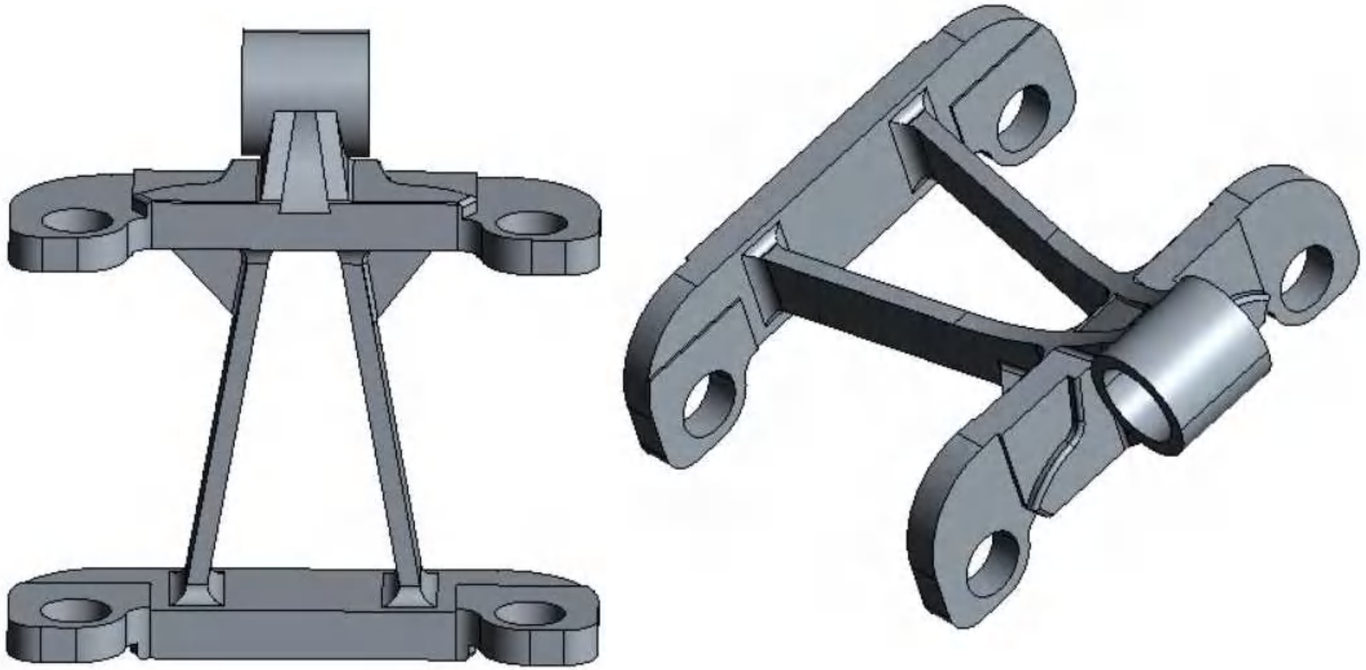

Difficulty

Complex structure, low process yield, difficult to correct, this is a safety component, all products to do magnetic powder detection and X-ray detection to ensure the surface and internal defects.

RAILWAY AND VEHICLE

These Are Representative And Technically Difficult Products.

Type	Hanging Bracket	
Weight	12.2kg	
Material	42CrMo	
HT	Quenching and Tempering	
Chemical Property		
C:0.38-0.45 Mn:0.6-1.0 Si:0.3-0.6 S:≤0.035 P≤0.035 Cr:0.8-1.2 Mo:0.2-0.3 Cu≤0.25 Ni≤0.03 V≤0.05		
Mechanical Property		
Yield	Tensile	Elongation
740-880	≥510	≥12
Hardness HB		
240-280		
Dimension		
Length	Width	Height
366mm	350mm	145mm
Difficulty		

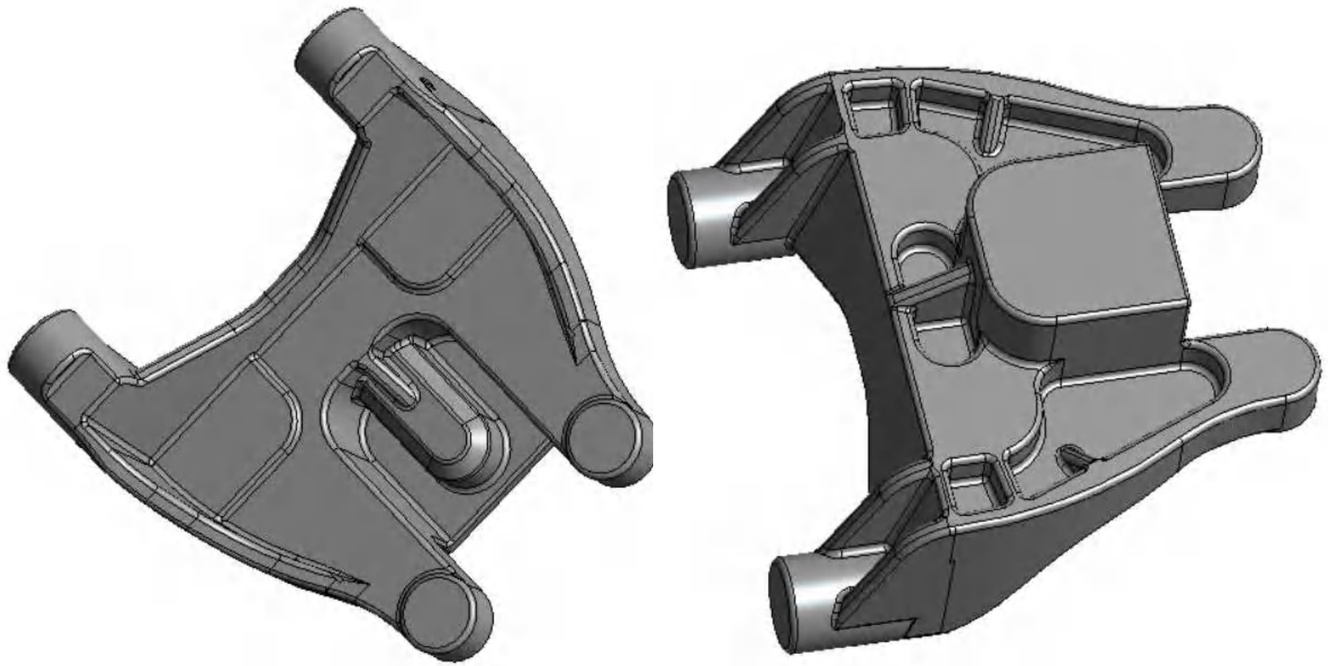

This product has complex structure, complicated process design, low production rate, and is prone to defects such as iron beans in the groove. This product needs to be tempered and its hardness is required to be hb240-280. As the material is 42CrMo, it is easy to have cracks when it is tempered.

RAILWAY AND VEHICLE

These Are Representative And Technically Difficult Products.

Type	Brake Support	
Weight	8.7kg	
Material	GS60	
HT	Normalizing	
Chemical Property		
0.3-0.4 Mn:0.2-0.5 P≤0.04 S≤0.04 Si:0.3-0.6		
Mechanical Property		
Yield	Tensile	Elongation
≥600	≥300	≥15
Reduction Of Area	Impact	Hardness HB
≥21	≥27	170-230
Dimension		
Length	Width	Height
382mm	206mm	163mm
Difficulty		

The product is easy to be deformed. The drawings require strict dimensional tolerance. The tolerance shall not exceed 0.5mm when the casting is calibrated.

SERVICES & EQUIPMENT

Production Process All Have Strictly Control And Monitor For Quality And Output

INVESTMENT CASTING PRODUCTION PROCESS

10 Steps From Development To Delivery

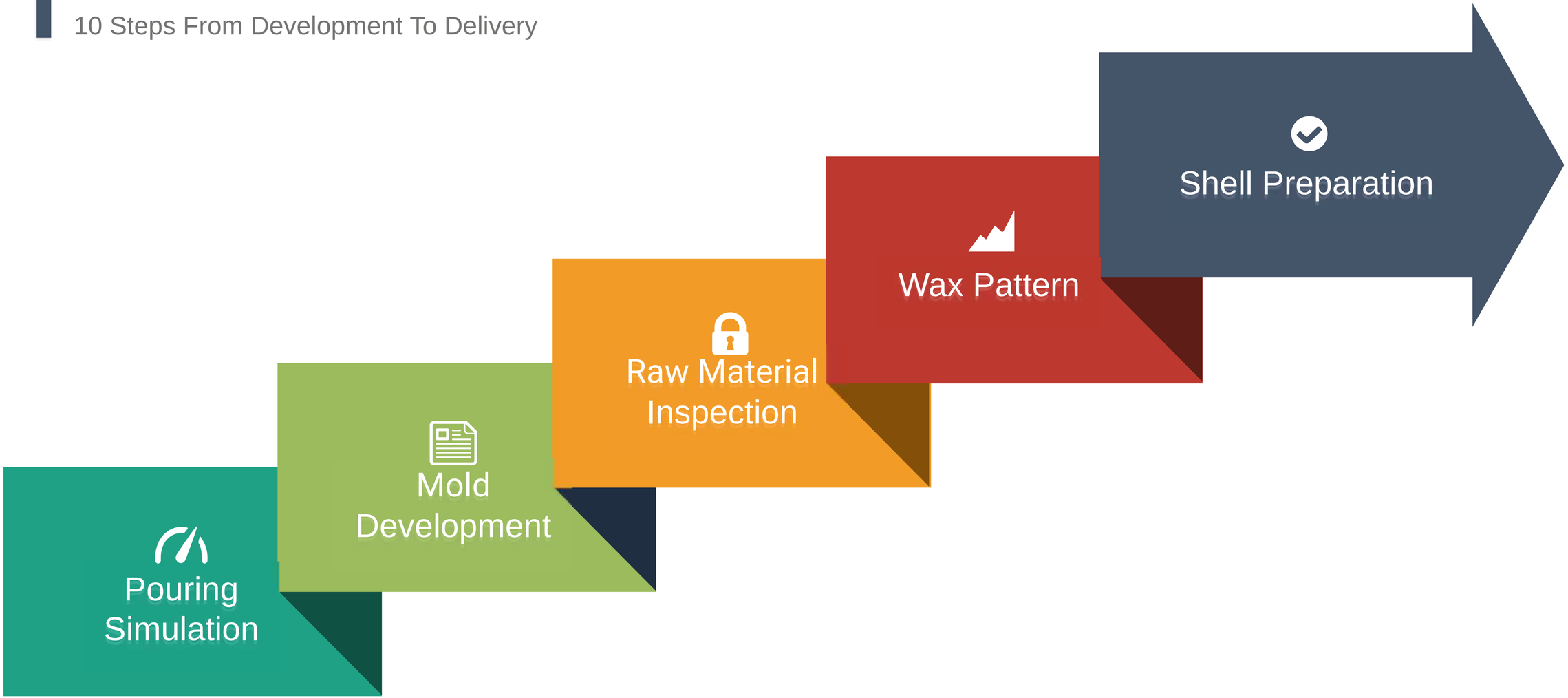

INVESTMENT CASTING PRODUCTION PROCESS

10 Steps From Development To Delivery

CASTIN GPRODUCTION FLOW & SERVICE

Pre-production: 1. Pouring System Simulation 2. Mold Development 3. Raw Material Purchasing

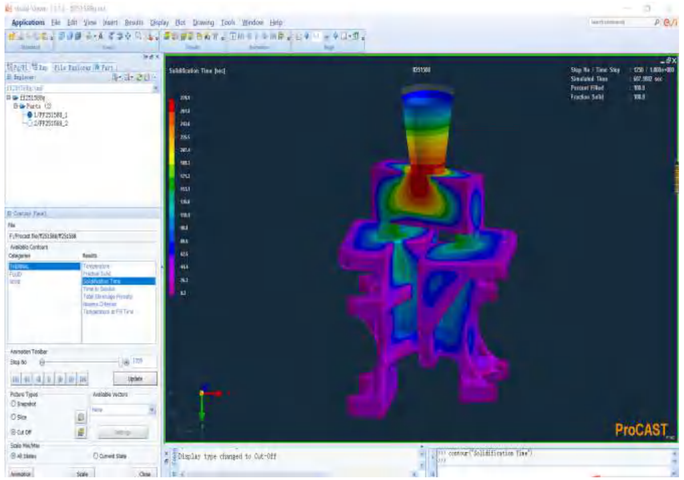

Pouring Simulation

A review meeting is held within the technical department to review the specification, determine the gating system and verify it through the simulation system software.

Mold Development

The technical department develops the mold, and the quality department uses the three coordinates to carry out the dimensional inspection.

Raw Material Inspection

The QA inspects the incoming materials. For the metal materials, inspection rate is 100%. Unqualified materials are strictly prohibited from entering the warehouse.

CASTIN GPRODUCTION FLOW & SERVICE

Production: 1. Wax Pattern Preparation 2. Shell Preparation

制 壳 控 制 计 划

JL-C01-09

□样件 □试生产 ■生产 控制计划编号 2013092001			主要联系人/电话 隋国江/13941584832						日期(编制) 2013.9.20		日期(修订)	
零件号/最新更改水平 BB40FA-2401045			核心小组:隋国江,宋兴广,孙家成,于晓娟,隋沛,杜安平,邢余真,韩智,张永彼						顾客工程批准/日期(如需要)			
零件名称/描述 推力杆支架			供方/工厂批准/日期						顾客质量批准/日期(如需要)			
供方/工厂 丹东大王精铸有限公司		供方代码	其它批准/日期(如需要)						其它批准/日期(如需要)			
零件/过程编号	过程名称/操作描述	机器、装置、夹具、工装	特性			特殊特性分类	方法					反应计划纠正措施
			编号	产品	过程		产品/过程规范/公差	评价/测量技术	取样		控制方法	
									容量	频率		
10	面层涂料配制	搅拌机、粘度计		浆料状态			浆料均匀无气泡、硬块	目测	100%	连续	目视观察	按照复合工艺规程重新调整
					面层涂料配比		硅溶胶:铝矾土=1:2.5	磅秤	100%	每缸	制壳工序控制记录	按照复合工艺规程重新调整
					面层涂料粘度		30-33S	粘度计	一次	每班	制壳工序控制记录	按照作业指导书重新调整
					铝矾土粒度		200目	筛网	100%	每批	制壳工序控制记录	按照复合工艺规程重新调整
20	面层沾浆	搅拌机		模组沾浆状态			模组不能卷进气体,保证涂料时的均匀性,不能堆积	目测	100%	连续	目视观察	按照作业指导书重新调整
30	面层撒砂	淋砂机		状态			保证均匀性,全覆盖表面	目测	100%	连续	目视观察	按照作业指导书重新调整

Wax Pattern

—

One shift for this step. If the production capability increases or customers have urgent demand, we can adjust shifts to guarantee supply. The workshop uses an automatic waxing machine to set the waxing pressure, holding time, etc.

Quality Control Proposal

—

The technical department develops workshop control plans and product operations, guide book, and there are specialized team who inspect each metric on a daily basis and keep them on record.

Shell Preparation

—

The workshop has 4 automatic production lines, able to produce 1800 sets of shells. We use hygrothermograph to monitor the humiture, use aerometer and PH to monitor the concentration of aluminum chloride liquor.

CASTIN GPRODUCTION FLOW & SERVICE

Production: 3. Shell Pouring 4. Cleaning

Shell Pouring

—

Six 250KG furnaces in use at the same time, and two 500KG spare furnaces for using when capacity increases. The operators measure the temperature of the molten steel.

浇 注 控 制 计 划

JL-C01-09

□样件 □试生产 ■生产 控制计划编号 2013092001	主要联系人/电话 隋国江/13941584832	日期(编制) 2013.9.20	日期(修订)
零件号/最新更改水平 BB40FA-2401045	核心小组:隋国江,孙家成,于晓娟,隋冲,杜安平,邢余真,韩智,张永波	顾客工程批准/日期(如需要)	
零件名称/描述 推力杆支架	供方/工厂批准/日期	顾客质量批准/日期(如需要)	
供方/工厂 丹东大王精铸有限公司 / 供方代码	其它批准/日期(如需要)	其它批准/日期(如需要)	

零件/过程编号	过程名称/操作描述	机器、装置、夹具、工装	特性 编号	特性 产品	特性 过程	特殊特性分类	方法 产品/过程规范/公差	方法 评价/测量技术	方法 取样 容量	方法 取样 频率	方法 控制方法	反应计划纠正措施
10	型壳焙烧	焙烧炉		焙烧合格模壳			焙烧合格模壳出炉时，应呈白色透明状，模壳内孔红白色，不冒黑烟，不能有明显裂缝、孔洞	目测	100%	连续	目视观察	按复合工艺规程重新调整或报废
					焙烧温度		850-920℃	温控表	100%	每炉	目视观察	按复合工艺规程重新调整
					保温时间		>30min	钟表	100%	每炉	目视观察	按复合工艺规程重新调整
20	筑、补炉、备料、浇包筑补烘烤			浇包烘烤			浇包应烘烤至暗红色方可使用	目测	100%	连续	目视观察	按复合工艺规程重新调整
					浇包烘烤时间		新浇包：1.5 小时修补的旧浇包：0.5 小时	钟表	100%	连续	目视观察	按复合工艺规程重新调整

Quality Control Proposal

—

The technical department develops workshop control plans and product operation instructions. A specific worker is responsible for conducting inspections on various metrics every day and keep records. Each furnace molten steel is subjected to post-furnace spectral analysis. We ensure that the chemical composition of the material is qualified.

Clean and Heat Treat

—

The workshop is fully equipped with 8 heat treatment furnaces, 3 quenching furnaces, 1 central shot blasting machine and 19 shot blasting machines.

CASTIN GPRODUCTION FLOW & SERVICE

Inspection: 1. Inspection Method 2. Products’ marks and records

MARKS

In order to prevent misuse of products, each workshop the product went though can be traced when necessary.
All the signs are set; the workshop pays attention to metrics and fills in the records truthfully.

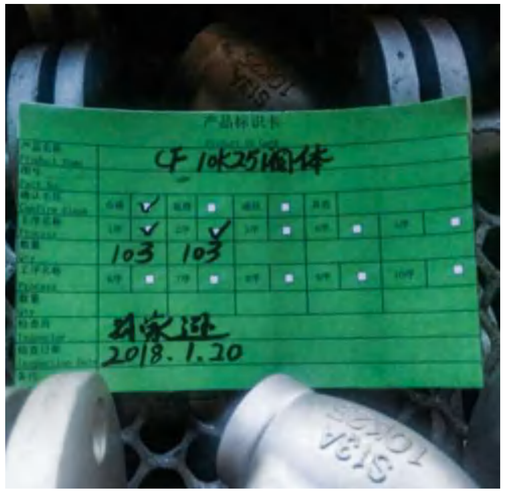

INSPECTION

All blank dimensions are checked using a CMM. We have rock well hardness machine, dynamic balance instrument, roundness meter, etc. The company's quality department has certified employees to do UT, PT, MT testing

制壳工序控制记录表

Shell Making Process Control Record Table

D日

品名称 ct Name	材质Material	天气Weather	晴 sunny ☐ 阴 Cloudy ☐ 雨 Rainy ☐ 雾 Foggy ☐
			风 向 / 风力

模料制备Mould material preparation — 实际执行工艺参 Actual execution process

料名称 rial Name	型号Type	单位Unit	数量 Quantity	项 目Item	标准值 Standard Value
溶胶				粉液比	
英粉				粘度 s	
溶胶				粉液比	
钒土				粘度 s	
				室温 ℃	
				湿度 %	
				干燥时间 h	

RECORDS

The QA inspects each workshop’s use of signs. The technical department worker inspect the compliance of the records and the execution of the workshop process.

INSPECTION

Workers’ self-inspection, inspector, first and last inspection, full inspection and other means. To ensure the processed products are qualified. In the initial inspection of the rough, the final inspection is carried out before the heat.

Dawang

CASTIN GPRODUCTION FLOW & SERVICE

Shipping: 1. Warehouse 2. Packaging 3. Shipping

Warehouse

The warehouse manager follows the company‘s finished-product warehouse management guidelines, classifies and stores according to customer and product requirements, avoiding problems such as product mixing and scratching.

Packaging

The technical department reviews the packaging requirements and develops packaging instructions, especially for packaging of machined products, and uses a bubble film to isolate the products to ensure no bumps. Specific products can be specially packaged according to customers’ requirements.

Shipping

The information of the transportation vehicle shall be checked in management systems, and the product shall be covered by the tarpaulin after the loading.

PRECISION CASTING EQUIPMENT

Automated Equipment To Increase Production Efficiency And Product Quality.

Wax Injection Machines

There are 12 new double-station wax injection machines in King Casting Factory and 10 new double-station wax injection machines in Sanhe Casting Factory to ensure quality and production capacity.

Dewaxing Devices

The dewaxing model shell adopts steam dewaxing, and has a complete set of dewaxing and recovery processing system . Safety and environmental protection.

PRECISION CASTING EQUIPMENT

Automated Equipment To Increase Production Efficiency And Product Quality.

Manipulator

DW has 6 mechanical shell making machines, which are responsible for the shell making of 6 production lines with stable quality and high efficiency.

Air Drying Equipment

The whole workshop is constant temperature and humidity, all-weather detection system, to ensure that the shell is dry and not cracking.

PRECISION CASTING EQUIPMENT

Automated Equipment To Increase Production Efficiency And Product Quality.

Shell Roasting

–

Tunnel kiln adopts natural gas combustion heating, safety, environmental protection and high efficiency, automatic monitoring of internal and external temperature and gas data.

Smelting Equipment

–

National top medium frequency furnace, higher energy conversion efficiency, safety alarm system real-time monitoring furnace wall thickness, soot dust removal system to ensure the workshop environment.

SAND CASTING PRODUCTION PROCESS

6 Steps From Development To Delivery

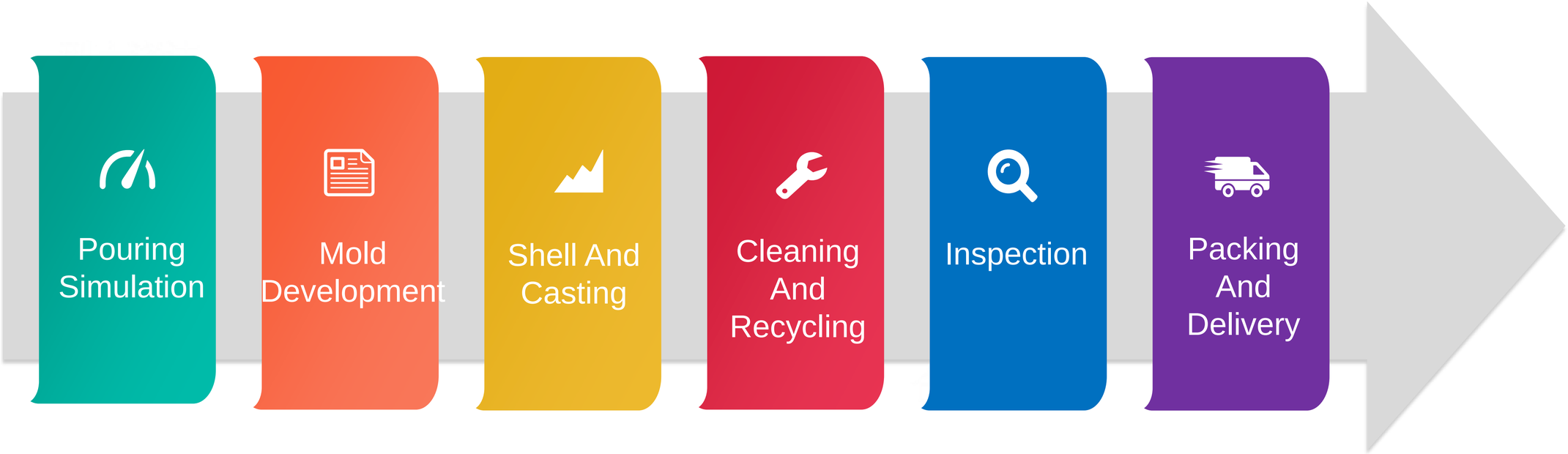

SAND CASTING PROCESS AND SERVICE

Production :1. Pouring System Simulation 2. Mold Development 3. Shell And Casting

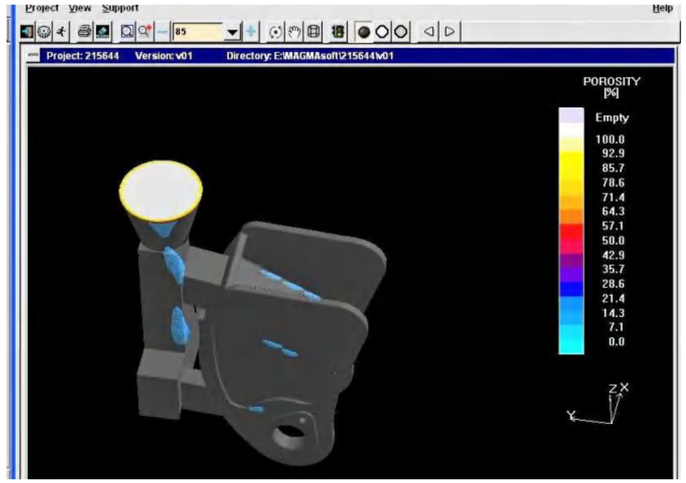

Pouring System Simulation

The technical department holds an internal review meeting, reviews the specific details, determines the gating system and verifies it through the simulation system software Magma or ProCAST.

Mold Development

The technical department discloses the technology to develop the mold, and the quality department uses the three-dimensional coordinate to check the size, and it can be used in the workshop after it is judged qualified.

Shell And Casting

Two 1T electric furnaces work at the same time. Molten steel is tested chemical composition on each furnaces to ensure quality.

SAND CASTING PROCESS AND SERVICE

Production : 4. Cleaning And Recycling 5. Inspection 6. Packing And Delivery

Cleaning And Recycling

—

Selection of excellent pearl sand technology, shell easy to clean and can be recycled.

Inspection

—

According to he customers' requirements, to do various quality inspection strictly.

Packing And Delivery

—

After making an inventory, delivery.

SAND CASTING EQUIPMENT

Automated Equipment To Improve Production Efficiency And Product Quality

Melting Furnace

2 medium-frequency induction furnaces, high efficiency, and equipped with dust treatment system.

Automatic Molding Line

An automatic molding line, using new technology and new materials, environmental protection and energy saving.

SAND CASTING EQUIPMENT

Automated Equipment To Improve Production Efficiency And Product Quality

Shell Mold Machine

Shell mold equipment is a kind of sand casting equipment, which can produce sand castings with low weight.

Clean Up The Sand

Clear the sand from the sandbox and refine it further.

Sand Reclamation

The advanced sand treatment system can recycle and reuse sand materials, saving energy and environmental protection.

MACHINING WORKSHOP

Complete Equipment And Professional Team Guarantee High-precision Product Requirements.

Vertical Machining Center

—

The company has 13 vertical machining centers

Processing Workshop

—

The workshop has 6 horizontal machining centers, 13 vertical machining centers, 13 CNC lathes, two large boring machines, as well as general milling machine drilling machine and other equipment.

Horizontal Machining Center

—

The company has 6 horizontal machining centers

MACHINING WORKSHOP

Complete Equipment And Professional Team Guarantee High-precision Product Requirements.

Large Equipment

—

KH63G horizontal machining center 、130 Large boring machine can be used for machining large castings 。

Large Equipment

—

110 large boring machine, 1.6m large vertical lathe can be used for machining large castings.

QUALITY INSPECTION EQUIPMENT

According To Customer Quality Requirements, a Variety Of Testing Solutions Are Available.

Hardness Tester

The company has Brinell hardness, Rockwell hardness tester, can provide customers with product hardness test.

CMM

The company has two sets of three coordinates, respectively for casting blank and processed products dimension inspection.

Tensile Testing Machine

It is used for tensile, compression, bending as well as other special tests for various metal material samples and products.

QUALITY INSPECTION EQUIPMENT

According To Customer Quality Requirements, a Variety Of Testing Solutions Are Available.

Impact Testing Machine

The company has 2 impact testing machines for metal Charpy impact test, to obtain the impact absorption work of metal samples.

MT

The equipment has manual and automatic control, which is suitable for quality inspection of large and small castings.

The Spectrometer

The company has 3 spectrometers, to meet all metal detection needs, can detect low nitrogen, low oxygen.

CUSTOMERS MAP

Most Customers Are Fortune 500 Firms

CUSTOMERS MAP

90% Of Its Products Are Exported

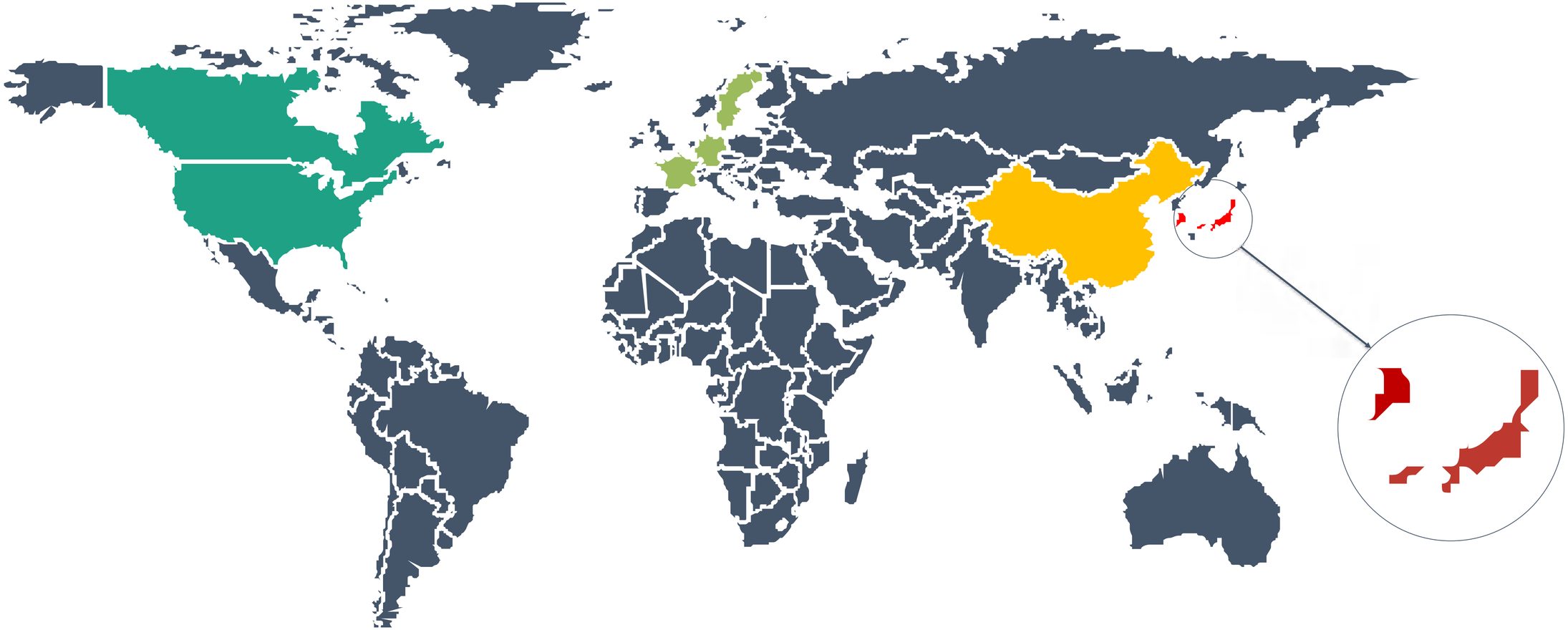

North America 40%

Europe 20%

Japan 30%

China 10%

Our Customers

Most Customers Are Fortune 500 Firms

LIEBHERR

CAT

HITACHI
Inspire the Next

KOMATSU

JOHN DEERE

azbil

Kubota

Prinoth

Tigercat

TADANO

Dawang

OUR CERTIFICATION

ISO、TUV、IATF16949, etc.

THREE STANDARD SYSTEM CERTIFICATION

The Latest System Certification Certificate

THE INTERNATIONAL CERTIFICATION NETWORK

CERTIFICATE

CQM as an IQNet Partner hereby states that the organization:

Dandong Dawang Steel Castings Co.,Ltd.

Certification Add: Xiaozhu Group, Dawang Village, Pusamiao Town, Donggang City, Liaoning, P.R.China

Post code: 118314

for the following scope:

Production of common cast steel parts, precision steel casting and common machining component

For the subsidiary site and certification scope to the attachment

has implemented and maintains a

Quality Management System

which fulfils the requirements of the following standard:

ISO 9001:2008

Issued on: 2017-08-01

First issued on: 2015-08-03

for the validity date, please refer to the original certificate* issued by CQM

Registration Number: CN-00215Q14399R0M

Michael Drechsel
President of IQNet

Ji XiaoDong
General Manager of CQM

IQNet Partners**:
AENOR Spain AFNOR Certification France Vinçotte Belgium APCER Portugal CCC Cyprus
CISQ Italy CQC China CQM China CQS Czech Republic Cro Cert Croatia DQS Holding GmbH Germany
FCAV Brazil FONDONORMA Venezuela ICONTEC Colombia IMNC Mexico Inspecta Certification Finland INTECO Costa Rica
IRAM Argentina JQA Japan KFQ Korea MIRTEC Greece MSZT Hungary Nemko AS Norway NSAI Ireland PCBC Poland
Quality Austria Austria RR Russia SIGE México SII Israel SIQ Slovenia SIRIM QAS International Malaysia
SQS Switzerland SRAC Romania TEST St Petersburg Russia TSE Turkey YUQS Serbia
IQNet is represented in the USA by: AFNOR Certification, CISQ, DQS Holding GmbH and NSAI Inc.

This attestation is directly linked to the IQNet Partner's original certificate and shall not be used as a stand-alone document

THE INTERNATIONAL CERTIFICATION NETWORK

CERTIFICATE

CQM as an IQNet Partner hereby states that the organization:

Dandong Dawang Steel Castings Co.,Ltd.

Certification Add: Xiaozhu Group, Dawang Village, Pusamiao Town, Donggang City, Liaoning, P.R.China

Post code: 118314

for the following scope:

Production of precision steel casting and common machining component and related management activities

has implemented and maintains a

Occupational health and safety Management System

which fulfils the requirements of the following standard:

OHSAS 18001:2007

Issued on: 2017-08-01

for the validity date, please refer to the original certificate* issued by CQM

Registration Number: CN-CQM17SI1521R1M

Michael Drechsel
President of IQNet

Ji XiaoDong
General Manager of CQM

IQNet Partners**:
AENOR Spain AFNOR Certification France Vinçotte Belgium APCER Portugal CCC Cyprus
CISQ Italy CQC China CQM China CQS Czech Republic Cro Cert Croatia DQS Holding GmbH Germany
FCAV Brazil FONDONORMA Venezuela ICONTEC Colombia IMNC Mexico Inspecta Certification Finland INTECO Costa Rica
IRAM Argentina JQA Japan KFQ Korea MIRTEC Greece MSZT Hungary Nemko AS Norway NSAI Ireland PCBC Poland
Quality Austria Austria RR Russia SIGE México SII Israel SIQ Slovenia SIRIM QAS International Malaysia
SQS Switzerland SRAC Romania TEST St Petersburg Russia TSE Turkey YUQS Serbia
IQNet is represented in the USA by: AFNOR Certification, CISQ, DQS Holding GmbH and NSAI Inc.

This attestation is directly linked to the IQNet Partner's original certificate and shall not be used as a stand-alone document

THE INTERNATIONAL CERTIFICATION NETWORK

CERTIFICATE

CQM as an IQNet Partner hereby states that the organization:

Dandong Dawang Steel Castings Co.,Ltd.

Certification Add: Xiaozhu Group, Dawang Village, Pusamiao Town, Donggang City, Liaoning, P.R.China

Post code: 118314

for the following scope:

Production of precision steel casting and common machining component and related management activities

has implemented and maintains a

Environmental Management System

which fulfils the requirements of the following standard:

ISO 14001:2004

Issued on: 2017-08-01

for the validity date, please refer to the original certificate* issued by CQM

Registration Number: CN-00217E21757R1M

Michael Drechsel
President of IQNet

Ji XiaoDong
General Manager of CQM

IQNet Partners**:
AENOR Spain AFNOR Certification France Vinçotte Belgium APCER Portugal CCC Cyprus
CISQ Italy CQC China CQM China CQS Czech Republic Cro Cert Croatia DQS Holding GmbH Germany
FCAV Brazil FONDONORMA Venezuela ICONTEC Colombia IMNC Mexico Inspecta Certification Finland INTECO Costa Rica
IRAM Argentina JQA Japan KFQ Korea MIRTEC Greece MSZT Hungary Nemko AS Norway NSAI Ireland PCBC Poland
Quality Austria Austria RR Russia SIGE México SII Israel SIQ Slovenia SIRIM QAS International Malaysia
SQS Switzerland SRAC Romania TEST St Petersburg Russia TSE Turkey YUQS Serbia
IQNet is represented in the USA by: AFNOR Certification, CISQ, DQS Holding GmbH and NSAI Inc.

This attestation is directly linked to the IQNet Partner's original certificate and shall not be used as a stand-alone document

THE INTERNATIONAL CERTIFICATION NETWORK

CERTIFICATE

CQM as an IQNet Partner hereby states that the organization

Annex (1) to IQNet Certificate Number CN- 00215Q14399R0M

Organization	Certification Address(Post Code)	Product and its process
The Sand Casting Workshop of Dandong Dawang Steel Castings Co.,Ltd.	Xujiatun Village, Pusamiao Town, Donggang City, Liaoning, P.R.China(118384)	Production of common steel casting

(This annex is effective only using with home page)

Issued on: 2017-08-01

First issued on: 2015-08-03

for the validity date, please refer to the original certificate* issued by CQM

Michael Drechsel
President of IQNet

Ji XiaoDong
General Manager of CQM

IQNet Partners**:
AENOR Spain AFNOR Certification France Vinçotte Belgium APCER Portugal CCC Cyprus
CISQ Italy CQC China CQM China CQS Czech Republic Cro Cert Croatia DQS Holding GmbH Germany
FCAV Brazil FONDONORMA Venezuela ICONTEC Colombia IMNC Mexico Inspecta Certification Finland INTECO Costa Rica
IRAM Argentina JQA Japan KFQ Korea MIRTEC Greece MSZT Hungary Nemko AS Norway NSAI Ireland PCBC Poland
Quality Austria Austria RR Russia SIGE México SII Israel SIQ Slovenia SIRIM QAS International Malaysia
SQS Switzerland SRAC Romania TEST St Petersburg Russia TSE Turkey YUQS Serbia
IQNet is represented in the USA by: AFNOR Certification, CISQ, DQS Holding GmbH and NSAI Inc.

This attestation is directly linked to the IQNet Partner's original certificate and shall not be used as a stand-alone document
* The list of IQNet partners is valid at the time of issue of this certificate. Updated information is available under www.iqnet-certification.com

TUV CERTIFICATION

It Is Valid Until 2021

TÜV NORD

ZERTIFIKAT

Qualitätsmanagementsystem für Werkstoffhersteller nach Druckgeräterichtlinie 2014/68/EU

Zertifikat-Nr.: 07/202/9030/WZ/1860/17

Name und Anschrift des Herstellers: Dandong Dawang Steel Castings Co., Ltd. Dawang Village, Pusamiao Town, Donggang City, Dandong City, Liaoning Province, 118314, P. R. China

Hiermit wird bescheinigt, dass der Hersteller ein **Qualitätsmanagementsystem in Bezug auf Werkstoffe** eingeführt hat und dies anwendet. Dieses QM-System wurde gemäß der Richtlinie 2014/68/EU, Anhang I, Nummer 4.3 in Bezug auf die im Geltungsbereich genannten Werkstoffe einer spezifischen Überprüfung unterzogen

Geprüft nach Richtlinie 2014/68/EU: **QM-System in Bezug auf Werkstoffe, EN 764-5, Abschnitt 4.2 und AD2000-Merkblatt W0**

Zertifizierung-Az.: **8114380395**

Auditbericht-Nr.: **9080AW_1860/17**

Geltungsbereich (Produkt / Werkstoff): **Gußstücke aus ferritischen und austenitischen Stählen**

Fertigungsstätte: **S. Adresse**

Das Zertifikat ist gültig bis: **Februar 2020**

Nur gültig in Verbindung mit einem gültigen Zertifikat nach EN ISO 9001.

Hamburg, 14.02.2017

Notifizierte Stelle (0045) für Druckgeräte

Dipl.-Ing. Marrek
TÜV NORD Systems GmbH & Co. KG
Große Bahnstraße 31, D-22525 Hamburg

Anlage: Geltungsbereich

Region: STW-HH
Technikzentrum,
D – 22525 Hamburg

Tel. +49-(0) 40 8557 2368
Fax +49-(0) 40 8557 2710
e-mail technikzentrum@tuev-nord.de

Mitglied der CEOC

Zertifikat QM Werkstoffhersteller DGR deu Rev.0/07.16

TÜV NORD

CERTIFICATE

Quality-Assurance System for material manufacturer according to directive 2014/68/EU

Certificate no.: 07/202/9030/WZ/1860/17

Name and address of the manufacturer: Dandong Dawang Steel Castings Co., Ltd. Dawang Village, Pusamiao Town, Donggang City, Dandong City, Liaoning Province, 118314, P. R. China

Herewith we certify that the manufacturer has established and applies a **quality-assurance system related to the material**. This QA System has been subjected to a specific assessment acc. to directive 2014/68/EU, annex I, point 4.3 with regard to the materials mentioned in the scope of approval..

Approved acc. to directive 2014/68/EU: **QA-System in relation to materials, EN 764-5, section 4.2 and AD2000-Merkblatt W0**

Certification file no.: **8114380395**

Audit report file no.: **9080AW_1860/17**

Scope of approval (product / material): **Castings of ferritic and austenitic steels**

Production site: **See address**

The certificate is valid until: **February 2020**

Only valid with a certificate in force acc. to EN ISO 9001

Hamburg, 14.02.2017

Notified Body (0045) for Pressure Equipment

Dipl.-Ing. Marrek
TÜV NORD Systems GmbH & Co. KG
Große Bahnstraße 31, D-22525 Hamburg

Annex: scope of approval

Region: STW-HH
Technikzentrum,
D – 22525 Hamburg

Phone +49-(0) 40 8557 2368
Fax +49-(0) 40 8557 2710
e-mail technikzentrum@tuev-nord.de

Member of CEOC

Certificate QA material manufacturer PED eng Rev.0/07.16

TÜV NORD

ZERTIFIKAT

Die TÜV NORD Systems GmbH & Co. KG

bescheinigt, dass das Unternehmen

**Dandong Dawang Steel Castings Co., Ltd.
Dawang Village, Pusamiao Town, Donggang City,
Dandong City, Liaoning Province,
118314 P. R. China**

als Werkstoffhersteller gemäß

AD 2000-Merkblatt W0

überprüft und anerkannt wurde.

Zertifikat-Nr.: 07/203/9030/WP/1860/17

Der Geltungsbereich der Überprüfung ist der Anlage „Geltungsbereich" zu entnehmen. Aktenzeichen: **8114380395**

Die Firma verfügt über folgende Voraussetzungen:
Einrichtungen, die eine sachgemäße und dem Stand der Technik entsprechende Herstellung und Prüfung gestatten, eine Qualitätssicherung, die eine den Technischen Regeln entsprechende Herstellung und Prüfung der in unserem Geltungsbereich genannten Erzeugnisformen sicherstellt, fachkundiges Aufsichts- und Prüfpersonal

Dieses Zertifikat ist gültig bis

Februar 2020

Hamburg, 14.02.2017

Marrek
TÜV NORD Systems GmbH & Co KG

TÜV NORD Systems GmbH & Co. KG • Technikzentrum •
Große Bahnstraße 31 • 22525 Hamburg
Telefon (040) 8557-2368 • Fax (040) 8557-2710 • E-mail: technikzentrum@tuev-nord.de

TÜV NORD

CERTIFICATE

The TÜV NORD Systems GmbH & Co. KG

certifies that the company

**Dandong Dawang Steel Castings Co., Ltd.
Dawang Village, Pusamiao Town, Donggang City,
Dandong City, Liaoning Province,
118314 P. R. China**

has been verified and recognized as material manufacturer according to

AD 2000-Merkblatt W0

Certificate-No.: 07/203/9030/WP/1860/17

The scope of approval is available in the annex "scope of approval".
File no.: **8114380395**.

The company fulfils the following essential requirements:
Facilities permitting appropriate manufacturing and inspection corresponding to the present technical standards, quality assurance, which guarantees that manufacturing and inspection of products stated in our scope of approval are carried out in accordance with technical regulations, competent supervising and inspecting personnel.

This certificate is valid until

February 2020

Hamburg, 14.02.2017

Marrek
TÜV NORD Systems GmbH & Co. KG

TÜV NORD Systems GmbH & Co. KG • Technikzentrum •
Große Bahnstraße 31 • 22525 Hamburg
Telephone +49 40 8557-0 • Fax +49 40 8557-2710 • E-mail: technikzentrum@tuev-nord.de

Dawang

IATF 16949

Automotive Industry Management System Standard

ZERTIFIKAT ■ CERTIFICATE ■ 認證證書 ■ СЕРТИФИКАТ ■ CERTIFICADO ■ CERTIFICAT

TÜV SÜD

CERTIFICATE

The Certification Body
of TÜV SÜD Management Service GmbH
certifies that

Dandong Dawang Steel Castings Co., Ltd.
Dawang Village, Pusamiao Town
Donggang City, Liaoning Province, P.R. China
Post Code: 118314

has established and applies
a Quality Management System for

Manufacturing of Sand Casting Steel Parts,
Precision Casting Steel Parts and Machining Parts
for Automotive Industry
(without Product Design as per Chapter 8.3)

An audit was performed and has furnished proof
that the requirements according to

IATF 16949
First Edition 2016-10-01

are fulfilled.

Issue date: **2018-04-27**

Expiry date: **2021-04-26**

Certificate Registration No.: **12 111 55742 TMS**

IATF Certificate No.: **0302199**

Part of the certificate is an appendix.

Product Compliance Management
Munich, 2018-05-02

Page 1 of 2

TÜV SÜD Management Service GmbH • Zertifizierungsstelle • Ridlerstraße 65 • 80339 München • Germany
www.tuev-sued.de/certificate-validity-check

TÜV

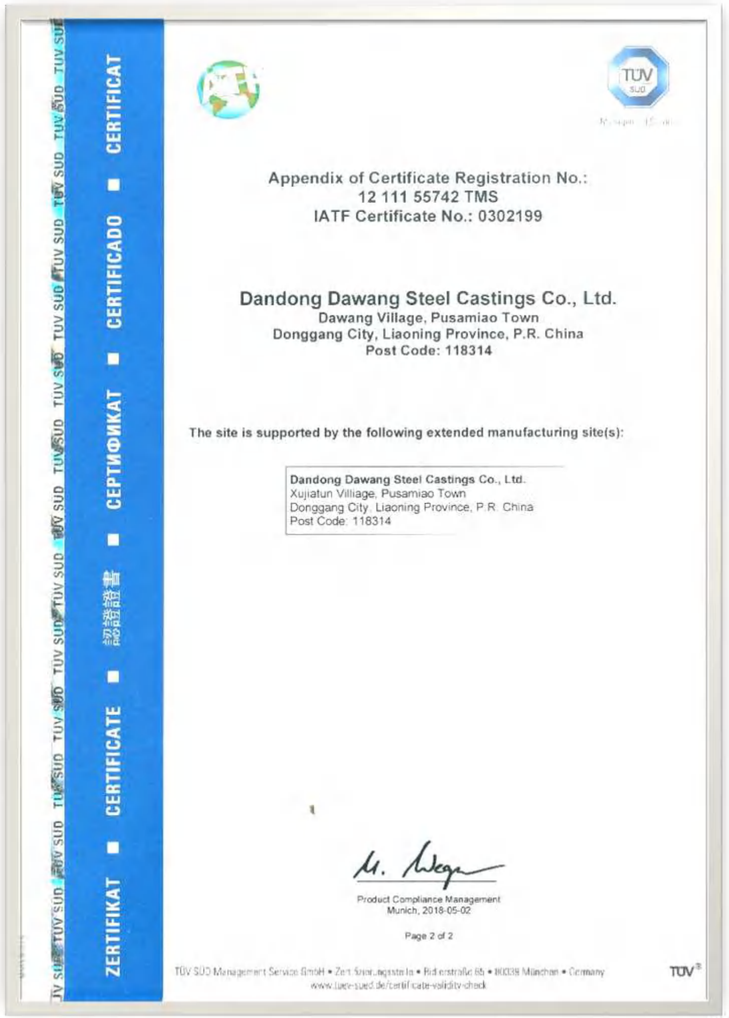

ZERTIFIKAT ■ CERTIFICATE ■ 認證證書 ■ СЕРТИФИКАТ ■ CERTIFICADO ■ CERTIFICAT

TÜV SÜD

Appendix of Certificate Registration No.:
12 111 55742 TMS
IATF Certificate No.: 0302199

Dandong Dawang Steel Castings Co., Ltd.
Dawang Village, Pusamiao Town
Donggang City, Liaoning Province, P.R. China
Post Code: 118314

The site is supported by the following extended manufacturing site(s):

Dandong Dawang Steel Castings Co., Ltd.
Xujiatun Villiage, Pusamiao Town
Donggang City, Liaoning Province, P.R. China
Post Code: 118314

Product Compliance Management
Munich, 2018-05-02

Page 2 of 2

TÜV SÜD Management Service GmbH • Zertifizierungsstelle • Ridlerstraße 65 • 80339 München • Germany
www.tuev-sued.de/certificate-validity-check

TÜV

ENVIRONMENTAL PERMITS

Comply With Environmental Policy Requirements

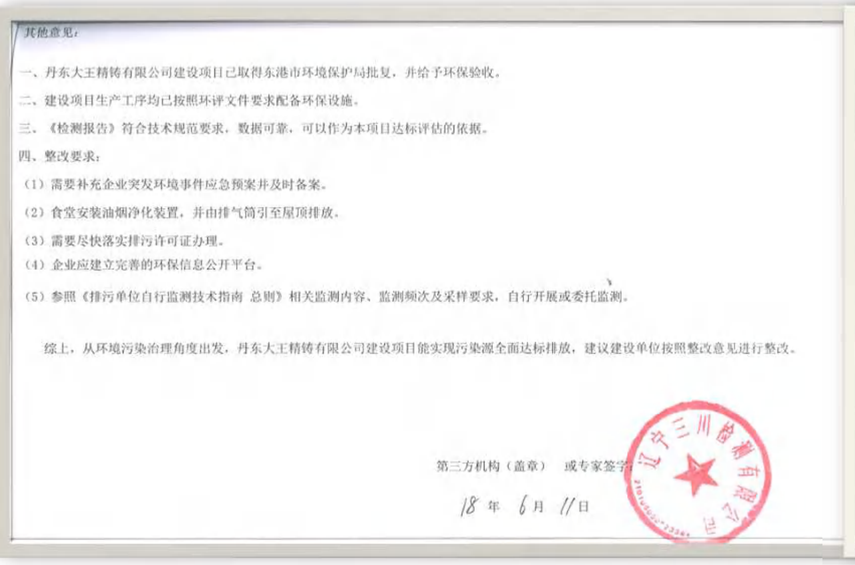

其他意见：

一、丹东大王精铸有限公司建设项目已取得东港市环境保护局批复，并给予环保验收。

二、建设项目生产工序均已按照环评文件要求配备环保设施。

三、《检测报告》符合技术规范要求，数据可靠，可以作为本项目达标评估的依据。

四、整改要求：

（1）需要补充企业突发环境事件应急预案并及时备案。

（2）食堂安装油烟净化装置，并由排气筒引至屋顶排放。

（3）需要尽快落实排污许可证办理。

（4）企业应建立完善的环保信息公开平台。

（5）参照《排污单位自行监测技术指南 总则》相关监测内容、监测频次及采样要求，自行开展或委托监测。

综上，从环境污染治理角度出发，丹东大王精铸有限公司建设项目能实现污染源全面达标排放，建议建设单位按照整改意见进行整改。

第三方机构（盖章） 或专家签字

18 年 6 月 11 日

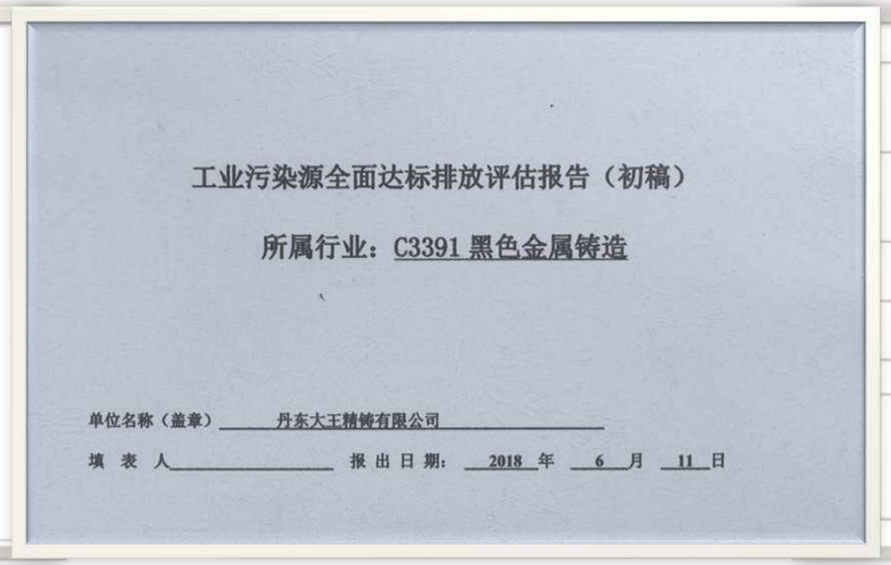

工业污染源全面达标排放评估报告（初稿）

所属行业：C3391 黑色金属铸造

单位名称（盖章） 丹东大王精铸有限公司

填 表 人 报 出 日 期： 2018 年 6 月 11 日

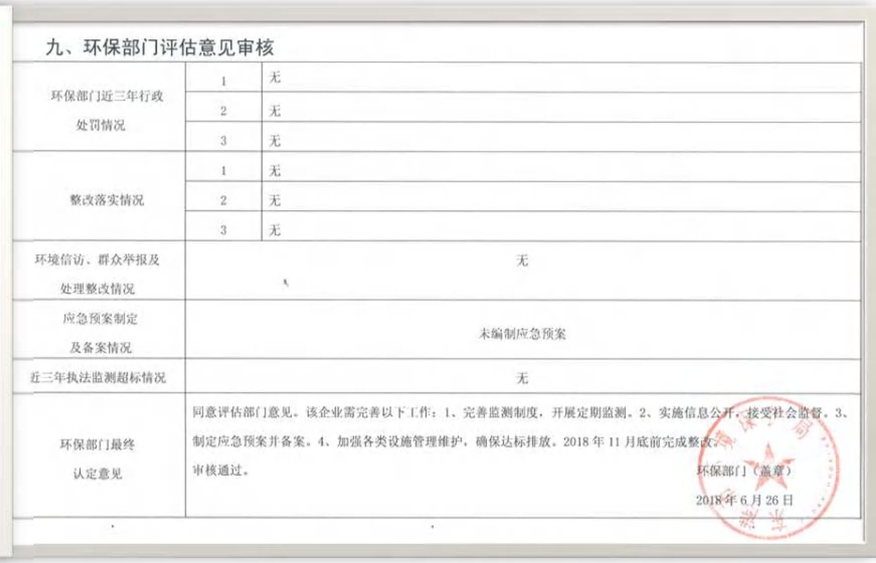

九、环保部门评估意见审核

环保部门近三年行政处罚情况	1	无
	2	无
	3	无
整改落实情况	1	无
	2	无
	3	无
环境信访、群众举报及处理整改情况	无	
应急预案制定及备案情况	未编制应急预案	
近三年执法监测超标情况	无	
环保部门最终认定意见	同意评估部门意见。该企业需完善以下工作：1、完善监测制度，开展定期监测。2、实施信息公开，接受社会监督。3、制定应急预案并备案。4、加强各类设施管理维护，确保达标排放。2018 年 11 月底前完成整改，审核通过。 环保部门（盖章） 2018 年 6 月 26 日	

OUR TEAM

400 Employees & 30+ Professional Technical Engineers

FOUNDER

Mr. Wang Is The Main Founder Of Dawang Casting.

Kaibao Wang

CEO & Founder

Kaibao Wang took over the foundry industry founded by his father in 1998. The fixed assets were less than 200,000 yuan, and the number of workers was less than 20. The trustee borrowed 100,000 yuan as the starting capital and started the road to entrepreneurship. In the past 20 years, Kaibao have continuously upgraded and upgraded the equipment and management of the factory, and made Dawang Casting a well reputed foundry in China. The founder has also become the “Top Ten Economic Development Figures” in Liaoning Province, received the honor “Private Star Entrepreneur” in Liaoning Province, “Outstanding Young Factory Director” nationwide.

sales@dddwjz.com

+86-415-7702362

www.dawangfoundry.com

Our Team

Group Building And Anniversary Display

2021Party

Our Team

Group Building And Anniversary Display

22nd Anniversary Activities

Our Team

Group Building And Anniversary Display

20nd Anniversary Activities

STAY IN TOUCH WITH US

DAWANG CASTING, EXCELLENT CASTING

Our Location

Dawang Village,Pusamiao Town,Donggang City,Liaoning Province .
ZIP 118314

Our Phone

(0415) 7702362
(0415) 7706276
Fax(0415) 7705999

Email / Website

sales@dddwjz.com
www.dawangfoundry.com